Department of School Education

(Pre-University)

Government of Karnataka

Revised Question Bank 2024-25

II PUC Electronics

© Directorate of School Education (Pre-University)

Disclaimer; The question bank is prepared for the benefit of students and teachers. The committee worked for the preparation of question bank made all efforts to make comprehensive and foolproof. However, if any mistakes, errors found, please mail at puebnewrevisedqb@gmail.com, academic.pue@gmail.com.

Copyrights; The copyright of the question bank lies with the Director, Department of School Education (Pre-University). The question bank is prepared for academic purpose only. No part of the question bank is allowed to use for commercial gains.

Question Bank Development Committee Electronics (40)	
Coordinator	**Shivashankar K** Senior Grade Lecturer Department of Electronics Government PU College for Girls Vani Vilas Institute, Fort, Bangalore – 560 002 shankarvanivilas@gmail.com
Member	**Savitha R** Senior Grade Lecturer Department of Electronics Vidya Mandir Independent PU College, 11th Cross Malleswaram, Bangalore 560 012 savitha.vijay.19@gmail.com
Member	**Malleswara M** Senior Grade Lecturer Department of Electronics Nutana Vidyalaya PU College, Kalburgi. malleshwara1973@gmail.com
Member	**T S Satish Kumar** Senior Grade Lecturer Department of Electronics Hymamshu Composite PU College, 4th Main Malleswaram, Bangalore 560 055 satish@hymamshu.org
Member	**Seema Milind Mahajan** Senior Grade Lecturer Department of Electronics SSMRV PU College, No 17, 26th Main, 36th Cross, 4th East T Block, Jayanagar, Bangalore 560 041 seemamilind.ssmrvpu@rvei.edu.in

Contents

Sl. No.	Name of the Chapter	Page no
1	Field Effect Transistor (FET)	2
2	Transistor Biasing	6
3	Transistor Amplifiers	10
4	Feedback in Amplifiers	17
5	Operational Amplifiers	22
6	Oscillators	30
7	Wireless Communications	37
8	Modulation and Demodulation	40
9	Power Electronics and its applications	48
10	Digital Electronics	55
11	Microcontroller	64
12	C - Programming	70
13	Modern Communication Systems	77

Chapter 1

Field Effect Transistors (FET)

Choose the correct answer:

1.	The number of terminals in FET is (a) one (b) two (c) three (d) four **(c) three**
2.	In JFET the ratio of drain to source voltage (V_{DS}) to drain current (I_D) for a constant value of gate to source voltage (V_{GS}) is known as (a) A.C drain resistance (b) D.C drain resistance (c) trans-conductance (d) amplification factor **(b) D.C drain resistance**
3.	Identify the terminals of JFET (a) Cathode, anode and grid (b) emitter, base and collector (c) source, gate and drain (d) anode, cathode and emitter **(c) source, gate and drain**
4.	In P-channel JFET, the charge carriers are (a) electrons (b) holes (c) both electrons and holes (d) neutrons **(b) holes**
5.	In N-channel JFET, the charge carriers are (a) electrons (b) holes (c) both electrons and holes (d) none of these **(a) electrons**
6.	The gate voltage in JFET at which drain current becomes zero is called as (a) breakdown (b) Saturation (c) pinch-off (d) cut-in **(c) pinch-off**
7.	If the reverse bias voltage on the gate of JFET is increased, the width of the conducting channel (a) decreases (b) increases (c) remains same (d) none of these **(a) decreases**
8.	The transfer characteristics of a JFET is (a) linear (b) nonlinear (c) exponential (d) diagonal **(b) nonlinear**

Fill in the blanks

1.	FET is a _____ controlled device. **voltage**
2.	The drain current in JFET is maximum when V_{GS} is _____ **zero**
3.	For the normal operation of an N-channel JFET the gate voltage must be _____ with respect to the source. **negative**
4.	FET has a very _____ input resistance or impedance. **high**
5.	The unit of trans-conductance is _____ **Siemens**

One mark questions (knowledge)

1. What is FET?
2. Expand JFET.
3. Expand MOSFET.
4. Expand IGFET.
5. Name the terminals of FET.
6. What are the two main types of FET?
7. What is n-channel JFET?
8. What is p-channel JFET?
9. Name the charge carrier in n-channel JFET.
10. Name the charge carrier in p-channel JFET.
11. Define dc drain resistance of JFET.
12. Define amplification factor of JFET.
13. What is the function of the gate in JFET?
14. What is the function of source in JFET?
15. What is the function of drain in JFET?
16. What is drain characteristics in JFET?
17. What are transfer characteristics in JFET?
18. What is drain resistance in JFET?
19. What is transconductance in JFET?
20. What is amplification factor in JFET?
21. Mention the SI unit of transconductance in JFET.

One mark questions (understanding)

1. Define pinch off voltage in JFET.
2. Is JFET a unipolar or a bipolar device?
3. Is JFET a current controlled device or a Voltage controlled device?
4. How many pn junctions are present in JFET?
5. What is the value of drain current at pinch off voltage?
6. What happens to the depletion regions when the gate reverse bias is increased?
7. How does the channel of JFET act like when gate is open?
8. Name any two characteristics of JFET.
9. Write any one characteristic feature of JFET.

One mark questions (skill)

1. Draw the symbol of n-channel JFET.
2. Draw the symbol of p-channel JFET.

Two mark questions (knowledge)

1. Define ac drain resistance in JFET. Write its expression.
2. Define transconductance in JFET. Write its expression.
3. What is I_{DSS}? Write the relation between I_D and I_{DSS}.

Two mark questions (understanding)

1. Expand FET and MOSFET.
2. What is the function of drain and gate in JFET?
3. Write any two differences between BJT and JFET.
4. Explain the terms r_d and g_m related to JFET.
5. What happens to the width of the depletion layer in JFET when the gate is reverse biased?
6. What is amplification factor in JFET? Write the relation between r_d and g_m.
7. Mention any two advantages of FET over BJT.

Two mark questions (skill)

1. Draw the circuit symbol of n-channel JFET and name the terminals.
2. Draw the circuit symbol of p-channel JFET and name the terminals.
3. Draw the drain characteristics of n-channel JFET.

4. Draw the transfer characteristics of n-channel JFET.
5. Draw the circuit to study the characteristics of n-channel JFET.

Three mark questions (knowledge)

1. What are the functions of drain, source and gate of JFET?
2. Draw the drain characteristics of an n-channel JFET and briefly explain the different regions of the drain characteristics.

Three mark questions (understanding)

1. Mention any three advantages of JFET over BJT.
2. Briefly explain the construction of n-channel FET.
3. Briefly explain the working of n-channel JFET with its relevant diagram.
4. Derive the relation $\mu = r_d \times g_m$ in JFET.
5. Explain the formation of depletion region in JFET due to drain source voltage.
6. Explain the formation of depletion region in JFET due to gate source potential.

Three mark questions (skill)

1. Draw and explain the transfer characteristic for an n-channel JFET.

Problems:

1. JFET has $g_m = 1500\ \mu s$ and $r_d = 5\ k\Omega$ determine its μ. (Ans: $\mu = 7.5$)
2. An n-channel JFET rated with values of $I_{DSS} = 10$ mA and $V_p = -3.5$ V is operated with I_D measured to be 3.265 mA. What is the value of V_{GS}? (Ans: $V_{GS} = -1.5$ V)
3. The pinch off voltage of FET is -3 V and drain saturation current is 40 mA. If the gate to source voltage is -2 V and drain to source voltage is 4 V, determine its drain current, transconductance and DC drain resistance.
   (Ans: $I_D = 6.66$ mA, $g_m = 3.33$ ms, $r_d = 600.6\ \Omega$)

*****

Chapter 2

Bipolar Junction Transistor (BJT) Biasing

Choose the correct answer:

1.	The most popular method of transistor biasing is (a) base bias (b) collector feedback bias (c) voltage divider bias (d) emitter feedback bias **(c) voltage divider bias**
2.	The operating point is also known as (a) cut-off point (b) quiescent point (c) saturation point (d) pinch-off point **(b) quiescent point**
3.	The stabilisation of operating point in voltage divider bias method is provided by the resistor (a) R_E (b) R_C (c) R_1 (d) R_2 **(a) $\boldsymbol{R_E}$**
4.	I_{CEO} is the flow of transistor leakage current from (a) collector to emitter with base open (b) collector to emitter with base closed (c) emitter to collector with base closed (d) emitter to collector with base open **(a) collector to emitter with base open**
6.	The saturation point on the dc load line is (a) $V_{CE} = 0\,, I_{C(sat)} = \frac{V_{CC}}{R_C}$ (b) $V_{BE} = 0\,, I_{C(sat)} = \frac{V_{CC}}{R_C}$ (c) $V_{CE} = 0\,, I_{C(sat)} = \frac{V_{BB}}{R_C}$ (d) $V_{BE} = 0\,, I_{C(sat)} = \frac{V_{BB}}{R_C}$ **(a) $\boldsymbol{V_{CE} = 0\,, I_{C(sat)} = \frac{V_{CC}}{R_C}}$**
7.	The cut-off point on the dc load line is (a) $V_{CE} = V_{CC}\,, I_C = 0$ (b) $V_{BE} = V_{CC}\,, I_C = 0$ (c) $V_{CE} = 0\,, I_C = 0$ (d) $V_{BE} = 0\,, \quad I_B = 0$ (a) $\boldsymbol{V_{CE} = V_{CC}\,, I_C = 0}$
8.	Heat sink is made of (a) metal (b) plastic (c) wood (d) ceramic **(a) metal**

Fill in the blanks

1.	The application of a suitable DC voltage across the transistor terminals is called _____ **transistor biasing**
2.	Biasing circuit that provides excellent stabilization is_____ **voltage divider bias**
3.	The straight line joining saturation point and cut-off point on the output characteristics of a transistor is called _____ **DC load line**
4.	In _____ region of characteristics, transistor behaves as an open switch. **cut-off**
5.	The self-destruction of a transistor due to rise in temperature is called _____ **thermal runaway**
6.	The ratio of change in collector current I_C to the change in reverse saturation current I_{CO} at constant V_{BE} and β is called _____ **stability factor**
7.	Smaller the stability factor, _____ is the thermal stability of the circuit. **better**
8.	The zero signal values of I_C and V_{CE} in a transistor is known as _____ **operating point**

One mark questions (knowledge)

1. Define operating point.
2. What is DC load line?
3. What is leakage current in BJT?
4. What is thermal run away?
5. Define stability factor in BJT.
6. What is heat sink?

One mark questions (understanding)

1. What is meant by transistor biasing?
2. Why transistor is called as a current controlled device?
3. Name the two end points of the DC load line.
4. What is the value of V_{CE} at saturation point?
5. What is the value of I_C at cut off point?

6. Where should the Q point be located for the transistor to be operated as an amplifier?
7. Write the expression for DC load line of a transistor in CE configuration?
8. For the BJT to work as a closed switch, in which region the operating point should be located on the DC load line?
9. For the BJT to work as an open switch, in which region the operating point should be located on the DC load line?
10. Mention the transistor parameter that is temperature dependent.
11. Mention any one leakage current in a transistor.
12. Name any one biasing methods for transistor.
13. Name the biasing circuit which provides excellent stabilization.

Two mark questions (knowledge)

1. What are the biasing conditions for a transistor to be used as an amplifier?
2. Mention any two types of biasing methods.
3. What is leakage current? Mention different types of leakage currents.

Two mark questions (understanding)

1. What is the need for biasing a transistor?
2. Write the advantages of voltage divider bias circuit.
3. What is heat sink? Mention its importance.

Two mark questions (skill)

1. Sketch the transistor output characteristics in CE mode. Indicate different regions of the characteristics.
2. Draw the biasing arrangement for npn transistor in CE configuration with two sources.
3. Draw the DC load line on the output characteristics of a CE amplifier.
4. Draw the circuit diagram of a voltage divider bias circuit.

Three mark questions (knowledge)

1. What is a Q point and explain its significance?
2. What is meant by stability factor? Mention the factors affecting it.

Three mark questions (understanding)

1. What is transistor biasing? Explain the need for biasing.
2. Derive an expression for the DC load line for a transistor in CE mode biased with two sources.
3. What is voltage divider bias? Mention its advantages.
4. Explain the leakage currents of BJT in CE and CB configuration

*****

Chapter 3

Transistor Amplifiers

Choose the correct answer:

1.	An electronic circuit which increases the magnitude of the input signal is known as (a) rectifier (b) amplifier (c) clamper (d) none of these **(b) amplifier**
2.	The phase difference between the input and output waveforms in CB amplifier is (a) 180° (b) 90° (c) 0° (d) none of these **(c) 0°**
3.	The number of transistors used in two stage CE amplifier is (a) one (b) two (c) three (d) four **(b) two**
4.	The unit of power gain is (a) volt (b) ampere (c) decibel (d) hertz **(c) decibel**
5.	Current gain in decibel is (a) $10 \log_{10} A_i$ (b) $\log_{10} A_i$ (c) $20 \log_{10} A_i$ (d) $30 \log_{10} A_i$ **(c) $20 \log_{10} A_i$**
6.	Voltage gain of common collector amplifier is (a) 0 (b) $\cong 1$ (c) ∞ (d) none of these **(b) $\cong 1$**
7.	Buffer amplifier is the alternative name of (a) CC-amplifier (b) CB-amplifier (c) CE-amplifier (d) current amplifier **(a) CC-amplifier**
8.	Power gain is the product of voltage gain and (a) current gain (b) resistance (c) frequency (d) impedance **(a) current gain**
9.	The range of frequencies between the two cut-off frequencies in an amplifier is known as (a) resonance (b) bandwidth (c) band factor (d) band pass **(b) bandwidth**
10.	For drawing ac equivalent circuit of a transistor, reduce all the dc sources to zero and (a) short all the capacitors (b) open all the capacitors (c) remove all the transistors (d) remove resistors **(a) short all the capacitors**

Fill in the blanks

1.	The process of increasing the magnitude of an input signal is called as _____ **amplification**
2.	Faithful amplification means increase in the amplitude of signal without any change in its _____ **shape**
3.	Phase difference between input and output waveforms in CE amplifier is _____ **180°**
4.	The alternative name for CC-amplifier is _____ **emitter follower**
5.	The amplifiers which raises the power level of the signal is called as _____. **power amplifiers**
6.	The need of cascading in amplifier system is to increase the _____ of the amplifier. **gain**
7.	Small signal amplifiers are also called as _____ amplifiers. **voltage**
8.	The voltage gain over mid-frequency range in an RC coupled amplifier is _____. **constant**

One mark questions (knowledge)

1. What is an amplifier?
2. Define amplification.
3. What is faithful amplification?
4. What is the function of coupling capacitor in an amplifier?
5. What is meant by small signal amplifier?
6. What is meant by large signal amplifier?
7. Define voltage gain of an amplifier?
8. Write an expression for voltage gain.
9. What is power gain?
10. Write the expression for power gain.
11. Define bandwidth of an amplifier.
12. Mention the unit of bandwidth?

13. What is meant by frequency response of an amplifier?
14. What is buffer amplifier?
15. What is cascaded amplifier?
16. What is power amplifier?
17. Write the expression for efficiency of power amplifier.
18. What is an RF amplifier?
19. What is meant by a single stage amplifier?
20. What is meant by multistage amplifier?
21. Define class A operation.
22. Define class B operation.
23. Define class AB operation.
24. Define class C operation.
25. Name the power amplifier whose operating point lies exactly at the center of the dc load line.
26. Name the power amplifier whose operating point lies exactly at the cut-off point on dc load line.
27. Name the power amplifier whose operating point lies slightly above the cut-off point on dc load line.
28. Name the power amplifier whose operating point lies slightly below the cut-off point on dc load line.

One mark questions (understanding)

1. Which amplifier is called as a unity gain amplifier?
2. Name the amplifier which has the highest current gain.
3. Which transistor amplifier has the phase shift of 180^0?
4. Why is the CC amplifier called as an emitter follower?
5. Which transistor amplifier has voltage gain less than unity?
6. What is the function of bypass capacitor in amplifiers?
7. Mention the importance of dc equivalent circuit in the analysis of an amplifier.
8. Which equivalent circuit is used to derive the amplifier parameters?
9. Write the expression of voltage gain using r'_e model by considering the load resistor R_L.
10. Where is the operating point of class A operation located?
11. Where is the operating point of class B operation located?
12. Where is the operating point of class AB operation located?

13. Where is the operating point of class C operation located?

One mark questions (skill)

1. Draw the frequency response curve of direct coupled CE amplifier.
2. Draw the frequency response curve of RC coupled CE amplifier.

Two mark questions (knowledge)

1. Define the terms amplification and amplifier.
2. Define small and large signal amplifiers.
3. Define voltage gain and current gain of an amplifier.
4. Write the expression of voltage gain and power gain in decibels?
5. Define input impedance and output impedance of an amplifier.
6. What is frequency response of an amplifier? Define bandwidth of an amplifier.
7. Mention the steps involved in drawing the dc equivalent circuit of an amplifier.
8. Mention the steps involved in drawing the ac equivalent circuit of an amplifier.
9. Mention any two characteristics of CC amplifier.
10. Mention any two characteristics of CE amplifier.
11. Mention any two characteristics of CB amplifier.
12. Mention the disadvantages of direct coupled amplifier?
13. Write the advantages of RC coupled amplifier?
14. What is cascading? Mention any one type of cascading.

Two mark questions (understanding)

1. Why do we prefer to express gain in decibel?
2. Classify amplifiers based on operating point.
3. Explain the factors affecting the gain at low and high frequencies.
4. Why is CE amplifier most commonly used in electronic circuits?
5. Explain the functions of the coupling and bypass capacitors?
6. Why does the gain of a CE amplifier decreases at very low frequencies?
7. Why does the gain of a CE amplifier decreases at very high frequencies?
8. Why does the gain of a CE amplifier remains constant at mid frequencies?
9. Distinguish between voltage amplifiers and power amplifiers.
10. Why is the power amplifier called as a large signal amplifier?

Two mark questions (skill)

1. Draw the DC equivalent circuit for a single stage CE amplifier using voltage divider biasing.
2. Draw the circuit diagram of a single stage CE amplifier using voltage divider bias along with its input and output waveforms.
3. Draw the circuit diagram of CB amplifier with its input and output waveforms.
4. Draw the circuit diagram of a CC amplifier, show its input and output waveforms.
5. Draw the ac equivalent circuit for a single stage CE amplifier using voltage divider biasing.
6. Draw the r'_e model of the transistor in CE mode.
7. Draw the frequency response of CE amplifier. Mention the expression for bandwidth.
8. In a CE amplifier circuit $R_C = 3.3$ kΩ and $R_L = 4.7$ kΩ. Calculate the output impedance.
9. If the ac resistance of the emitter diode is 50 Ω, $R_C = 20$ kΩ and β of the transistor is 70, calculate the power gain and voltage gain of an amplifier.
10. Calculate the voltage gain of a CE amplifier if the value of R_C is 2.2 kΩ, R_L is 3.3 kΩ and r'_e is 52 Ω.

Three mark questions (knowledge)

1. Define the input impedance, output impedance and current gain of an amplifier.
2. Define class A, class B and class C power amplifiers.

Three mark questions (understanding)

1. Compare CE, CB and CC amplifier with respect to voltage gain and phase relation.
2. Compare CE, CB and CC amplifier with respect to input and output impedance.
3. Derive the expression for voltage gain and output impedance of single stage CE amplifier with r'_e model.
4. Derive the expressions for power gain and input impedance of single stage CE amplifier using r'_e model.
5. Explain in brief the frequency response of a single stage CE amplifier.
6. Write any three differences between the voltage amplifiers and power amplifiers.

Five mark questions (knowledge)

1. Write the procedure involved in obtaining AC and DC equivalent circuits of voltage divider biasing CE amplifier. Draw the AC equivalent circuit.
2. What is a cascaded amplifier? What is the need for cascading? Write the expression for the overall voltage gain of a cascaded amplifier.

Five mark questions (understanding)

1. With a circuit diagram describe the working of a CB amplifier and draw its input and output waveforms.
2. Explain the working of CE amplifier with a circuit diagram using voltage divider bias and draw its input and output waveforms.
3. Explain the working of CC amplifier with a circuit diagram and draw its input and output waveforms.
4. Explain with the circuit diagram, the working of two stage Direct coupled CE amplifier. Draw the frequency response curve.
5. With a circuit diagram explain the working of two stage RC coupled CE amplifier. Draw its frequency response curve.

Five mark questions (skill)

1. With a circuit diagram describe the working of CB amplifier and draw its input and output waveforms.
2. Explain the working of CE amplifier with a circuit diagram using voltage divider bias and draw its input and output waveforms.

Problems:

1. Find the voltage gain and input resistance of a single stage CE amplifier if V_{CC} = 18 V, R_1 = 47 kΩ, R_2 = 12 kΩ, R_C = 3.3 kΩ, R_E = 1000 Ω, R_L = 10 kΩ, β = 100, V_{BE} = 0.3 V and $r'_e = 26mV/I_E$. **(Ans: Z_{in} = 878.3 Ω and A_V = 375.8)**

2. For the CE amplifier circuit given, R_1 = 100 kΩ, R_2 = 10 kΩ, R_c = 2.2 kΩ, R_E = 220 Ω, V_{CC} = 15 V, I_E = 3.41 mA, V_{BE} = 0.7 V and β = 100. Calculate the voltage gain, r'_e, power gain, A_V in dB and A_P in dB.
(Ans: r'_e = 7.62 Ω, A_V = 288.7, A_P = 28870, A_V in dB = 49.20 dB and A_P in dB = 44.60 dB)

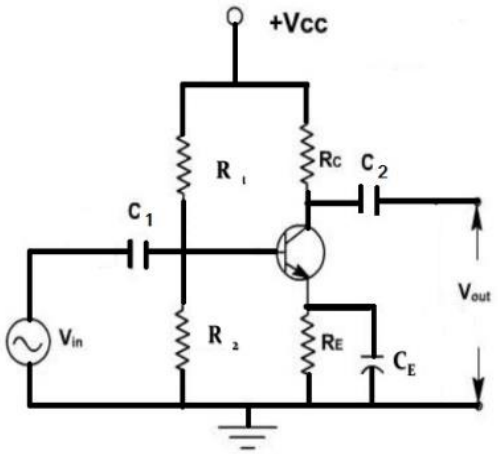

3. If an amplifier is provided with input voltage of 5 mV, the maximum voltage gain is 2000 for signal frequency of 2 kHz. It falls to 1414 at 10 kHz and 50 Hz. Find the output voltage, gain in dB, upper cut-off frequency, lower cut-off frequency and bandwidth.

   (Ans: V_O = 10 V, A_{Vmax} in dB = 66.02 dB, f_L = 50 Hz, f_H = 10 KHz and BW = 9.95 KHz)

*****

Chapter 4

Feedback in Amplifiers

Choose the correct answer:

1.	The amplifier in which feedback is used is known as (a) dc amplifier (b) zero amplifer (c) feedback amplifier (d) rectifier **(c) feedback amplifier**
2.	Negative feedback is used in (a) amplifiers (b) oscillators (c) rectifiers (d) regulators **(a) amplifiers**
3.	The only advantage of positive feedback is (a) voltage gain increases (b) voltage gain decreases (c) noise increases (d) distortion increases **(a) voltage gain increases**
4.	In a voltage-series negative feedback, the closed loop gain of the amplifier is (a) $A_f = \frac{A}{1-A\beta}$ (b) $A_f = \frac{A}{1+A\beta}$ (c) $A_f = \frac{A}{A\beta}$ (d) $A_f = \frac{A}{1-\beta}$ $(\boldsymbol{b})\ \boldsymbol{A_f = \frac{A}{1 + A\beta}}$
5.	The gain of an amplifier without any feedback is known as (a) open-loop gain (b) feedback gain (c) loop-gain (d) closed-loop gain **(a) open-loop gain**
6.	The negative feedback amplifier which has both input impedance and output impedance low is (a) voltage-series (b) current-series (c) voltage-shunt (d) current-shunt **(c) voltage-shunt**

Fill in the blanks

1.	The process of feeding a portion (fraction) of the amplifier output back to its input is known as _____ **feedback**
2.	If the feedback signal is in phase with the input signal, then the feedback is known as _____ **positive feedback**
3.	If the feedback signal is 180° out-of-phase with the input signal, then it is called as _____

	negative feedback
4.	The type of negative feedback which increases input impedance and decreases output impedance _____ **voltage – series**
5.	The product of open-loop gain and feedback fraction is termed as _____ **loop gain**
6.	When voltage-series negative feedback is applied to an amplifier, its gain bandwidth product _____ **remains constan**

One mark questions (knowledge)

1. What is feedback?
2. Mention the types of feedback?
3. Define positive feedback.
4. Define negative feedback.
5. Define feedback factor.
6. Define open loop gain.
7. Define closed loop gain.
8. What is meant by loop gain?
9. Write the expression for the gain of an amplifier with positive feedback.
10. Write the expression for the gain of an amplifier with negative feedback.
11. Write the expression for the input impedance of an amplifier with negative feedback.
12. Write the expression for the output impedance of an amplifier with negative feedback.
13. Write the expression for the upper cut-off frequency of an amplifier with negative feedback.
14. Write the expression for the lower cut-off frequency of an amplifier with negative feedback.
15. Name the type of feedback that is preferred for an amplifier.
16. Which type of feedback is used to build an oscillator?
17. What is the effect of negative feedback on bandwidth of an amplifier?
18. What happens to the input impedance of the amplifier when voltage series negative feedback is applied?
19. What happens to the output impedance of the amplifier when voltage series negative feedback is applied?

20. What is the effect of negative feedback on gain stability of an amplifier?
21. Which type of negative feedback decreases both input and output impedance of an amplifier?
22. What kind of negative feedback decreases input impedance and increases output impedance?
23. What is the effect of negative feedback on the gain bandwidth product of the amplifier?
24. Mention the only disadvantage of negative feedback.

One mark questions (understanding)

1. What happens to the voltage gain of an amplifier when negative feedback is applied?
2. What happens to the input impedance of an amplifier when negative feedback is applied?
3. Which type of feedback is used to reduce distortion in an amplifier?

One mark questions (skill)

1. Draw the block diagram of voltage series negative feedback.
2. Draw the block diagram of voltage shunt negative feedback.
3. Draw the block diagram of current series negative feedback.
4. Draw the block diagram of current shunt negative feedback.

Two Marks Questions (knowledge)

1. Name the type of feedback used in an amplifier and an oscillator.
2. Mention the advantages of negative feedback.
3. Mention the different types of negative feedback.
4. Mention the disadvantages of positive feedback.
5. Write the expressions for the gain and bandwidth of an amplifier using voltage series negative feedback.
6. Write the expressions for the input impedance and output impedance using voltage series negative feedback.
7. Write the expressions for the lower cutoff frequency and upper cutoff frequency of an amplifier using voltage series negative feedback.

Two Marks Questions (understanding)

1. Distinguish between open loop and closed loop gain.
2. Distinguish between positive feedback and negative feedback.
3. Explain the effect of positive and negative feedback on the gain of an amplifier.
4. Positive feedback is seldom used in amplifier, why?
5. Explain gain bandwidth product of an amplifier.

Two Marks Questions (skill)

1. Draw the block diagrams of voltage series negative feedback and current shunt negative feedback.
2. Draw the block diagrams of current series negative feedback and voltage shunt negative feedback.
3. Draw the frequency response curve of an amplifier with and without feedback.

Three Marks questions (knowledge)

1. Explain the terms feedback ratio, loop gain and closed loop gain.

Three Marks questions (understanding)

1. With a block diagram, derive an expression for output impedance of an amplifier with series negative feedback.
2. With a block diagram, derive an expression for voltage gain of an amplifier with series negative feedback.
3. With a block diagram, derive an expression for input impedance of an amplifier with series negative feedback.

Three Marks questions (skill)

1. Draw the frequency response curve of an amplifier with and without feedback. Write the expression for the bandwidth of an amplifier with negative feedback.

Problems:

1. Calculate the gain of a negative feedback amplifier with an open loop gain A = 250 and feedback factor β = 0.1. **(Ans = 9.65)**
2. In a negative feedback amplifier if A = 1000 and β = 0.04, find the gain with feedback. **(Ans = 24.39)**
3. An amplifier of gain 600 reduces to 50 after negative feedback. Calculate the feedback fraction. **(Ans = 0.0183 or 1.83%)**
4. If an amplifier has a bandwidth of 500 Hz and voltage gain of 100. What will be the new bandwidth if 6% negative feedback is introduced? **(Ans = 3500 kHz)**
5. In an amplifier upper cut-off frequency is 1000 kHz and open loop gain is 100. Determine upper cut-off frequency when 2% negative feedback is introduced. **(Ans = 3000 kHz)**
6. In an amplifier lower cut-off frequency is 500 Hz and open loop gain is 100. Determine lower cut-off frequency when 5% negative feedback is introduced. **(Ans = 83.3 Hz)**
7. An amplifier with Z_i =1 kΩ has a voltage gain A = 1000. If a negative feedback of β = 0.01 is applied. Calculate the input impedance of the negative feedback amplifier. **(Ans = 11 kΩ)**
8. An amplifier with Z_O =10 kΩ has a voltage gain A = 500. If a negative feedback of β = 0.01 is applied. Calculate the input impedance of the negative feedback amplifier. **(Ans = 1.6 kΩ)**
9. An amplifier has a bandwidth of 220 kHz and voltage gain of 100. Calculate the gain and bandwidth if 10% negative feedback is introduced. **(Ans = 2420 kHz)**
10. An amplifier has an output impedance of 3 kΩ without feedback and 300 Ω with feedback. If the open loop gain is 180 find the feedback factor. **(Ans = 0.05 or 5%)**
11. The input impedance of an amplifier is 2 kΩ while its output impedance with and without feedback is 150 Ω and 5 kΩ. If the open loop gain of the amplifier is 500, calculate the input impedance with feedback. **(Ans = 66.6 kΩ)**
12. The output impedance of an amplifier is 5 kΩ while its input impedance with and without feedback is 15 kΩ and 5 kΩ. If the open loop gain of the amplifier is 100, calculate the gain with feedback. **(Ans = 33.3)**

*****

Chapter 5

Operational Amplifier

Choose the correct answer:

1.	An op-amp circuit in which the output signal is in-phase with the input signal is known as (a) non-inverting amplifier (b) inverting amplifier (c) both (a) and (b) (d) none of these **(a) non- inverting amplifier**
2.	The voltage gain of an op amp buffer amplifier is (a) infinity (b) zero (c) unity (d) none of these **(c) unity**
3.	The ratio of differential mode gain to common mode gain is called as (a) CMRR (b) RRMC (c) EMR (d) CMR **(a) CMRR**
4.	The open-loop gain value of an ideal op-amp is (a) 0 (b) 1 (c) ∞ (d) none of these **(c) ∞**
5.	An op-amp differentiator converts square waves into (a) sawtooth wave (b) AM wave (c) FM wave (d) sine waves **(a) sawtooth wave**
6.	An active low pass filter circuit which uses only one RC-section is called as (a) first order low pass active filter (b) zero order low pass active filter (c) third order low pass active filter (d) second order low pass filter **(a) first order low pass active filter**

Fill in the blanks

1.	An op-amp is a high-gain, directly coupled, negative feedback _____amplifier. **differential**
2.	A differential amplifier amplifies the _____ between two input signals. **difference**
3.	Op-amp buffer is used for _____ matching. **impedance**
4.	The rate of change of output voltage is known as _____ **slew rate**
5.	The CMRR value of an ideal op-amp is _____ **infinity (∞)**

6.	The output impedance of an ideal op-amp is _____ **zero (0)**
7.	Op-amp in an open-loop configuration can be used as a _____ **comparator**
8.	An op-amp differentiator converts sine wave into _____ wave. **cosine**
9.	The feedback element in an op-amp differentiator is _____ **resistor**
10.	An op-amp integrator converts square waves into _____ wave. **triangular**

One mark questions (knowledge)

1. What is a differential amplifier?
2. What is an op-amp?
3. Draw the pin configuration of IC-741.
4. Write any one ideal characteristics of an op-amp.
5. Define input offset voltage.
6. Define CMRR of an op-amp.
7. Mention the CMRR value of an ideal op-amp.
8. Define slew rate of an op-amp.
9. Mention the unit of slew rate.
10. Mention any one linear application of op-amp.
11. Mention any one non-linear application of op-amp.
12. What is the phase difference between input and output of an inverting op amp?
13. What is the phase difference between input and output of a non-inverting op amp?
14. What is the advantage of using op-amp as a buffer?
15. Write an expression for output voltage of three input inverting op-amp adder when V_1, V_2 and V_3 are the inputs applied. Consider that all the resistors used are identical.
16. Write an expression for output voltage of three input op-amp adder when V_1, V_2 and V_3 are the inputs applied, considering the resistors used are of different values.
17. Write an expression for output voltage of an op-amp subtractor when V_1 is connected to inverting terminal and V_2 is connected to non-inverting terminal. Consider all the resistors used are identical.

18. Write an expression for output voltage of op-amp subtractor when V_1 is given to inverting terminal and V_2 is given to non-inverting terminal, considering the resistors used are of different values.
19. What is an op-amp differentiator?
20. Write an expression for the output voltage of an op-amp differentiator.
21. What is an op-amp integrator?
22. Write the expression for output voltage of an op-amp integrator.
23. What is an op-amp active filter?
24. Write an expression for cut off frequency of an op-amp first order low pass active filter.
25. Write the expression for cut-off frequency of an op-amp first order high pass active filter.
26. What is an op-amp comparator?

One mark questions (understanding)

1. Why is input current drawn by an ideal op-amp zero?
2. When does a comparator produce zero output?

One mark questions (skill)

1. Draw the circuit symbol of an op-amp.
2. Draw the circuit diagram of an op-amp subtractor.
3. Draw the circuit diagram of an op-amp differentiator.
4. Sketch the output of an op-amp differentiator if the input is a square wave.
5. Sketch the output of an op-amp differentiator if the input is a sine wave.
6. Draw the circuit diagram of an op-amp integrator.
7. Write the expression for output voltage of an op-amp integrator.
8. Sketch the output of an op-amp integrator if the input is a sine wave.
9. Sketch the output of an op-amp integrator if the input is a square wave.
10. Draw the circuit diagram of an op-amp first order low pass active filter.
11. Draw the frequency response curve of an op-amp low pass active filter.
12. Draw the circuit diagram of an op-amp high pass active filter.
13. Draw the frequency response curve for an op-amp first order high pass active filter.

Two mark questions (knowledge)

1. Name the different modes of a differential amplifier.
2. Mention the characteristics of an ideal op-amp.
3. Expand CMRR? Give its value for ideal op-amp.
4. Define CMRR. What is its importance?
5. With a circuit diagram briefly explain virtual ground concept of an op-amp.
6. What is an op amp buffer? Draw its circuit diagram.

Two mark questions (understanding)

1. Why is an op-amp so called?
2. Distinguish between inverting and non-inverting operational amplifier.

Two mark questions (skill)

1. Draw the block diagram of an op-amp.

Three mark questions (knowledge)

1. Mention the characteristics of an ideal op-amp.
2. Draw the circuit diagram, frequency response and expression for cut-off frequency for an op-amp first order RC low pass active filter.
3. Draw the circuit diagram, frequency response and expression for cut-off frequency for an op-amp first order RC high pass filter.

Three mark questions (understanding/skill)

1. Draw the circuit diagram of an op amp inverting amplifier and derive an expression for its voltage gain.
2. Draw the circuit diagram of an op-amp non-inverting amplifier and derive an expression for its voltage gain.
3. Draw the circuit diagram of a three input inverting op-amp summing amplifier and derive an expression for its output voltage.
4. Draw the circuit diagram of an op-amp subtractor and derive an expression for its output voltage.
5. Draw the circuit diagram of an op-amp differentiator and derive an expression for its output voltage.
6. Draw the circuit diagram of an op-amp integrator and derive an expression for its output voltage.

7. Draw the circuit diagram, frequency response curve and write the expression for cut-off frequency of an op-amp first order RC low pass active filter.
8. Draw the circuit diagram, frequency response curve and write the expression for cut-off frequency of an op-amp first order RC high pass filter.

Five mark questions (Understanding)

1. Write the block diagram of an op-amp and explain each block in brief.
2. What are active filters? Give its classification. Draw the circuit diagram, frequency response curve and expression for the cut-off frequency of an op-amp first order RC high pass filter.
3. What is an op-amp summing amplifier? Draw the circuit diagram of a three input inverting op-amp adder and derive an expression for its output voltage.
4. What is an op-amp subtractor? Draw the circuit diagram of an op-amp subtractor and derive an expression for its output voltage.
5. What is an op-amp differentiator? Draw the circuit diagram of an op-amp differentiator and derive an expression for its output voltage.
6. What is an op-amp integrator? Draw the circuit diagram of an op-amp integrator and derive an expression for its output voltage.

Problems:

1. If common mode gain and differential mode gain for a differential amplifier are 0.1 and 500 respectively, find CMRR in dB. **(Ans: 74)**
2. In an inverting amplifier, the input voltage is 0.5 V and the output voltage is 2 V. If the input resistance of the amplifier is 1.2 kΩ. Calculate the feedback resistance. **(Ans: 4.8 kΩ)**
3. In an inverting amplifier, the input voltage is 3 V and the output voltage is 6 V. If the feedback resistance of the amplifier is 10 kΩ. Calculate the input resistance. **(Ans: 5 kΩ)**
4. Calculate the output voltage of an inverting amplifier using an input resistance of 2.2 kΩ and feedback resistance of 6.8 kΩ when the input voltage is 0.2V. **(Ans: 0.62 V)**
5. Calculate the input voltage of an inverting amplifier using an input resistance of 100 Ω and feedback resistance of 120 Ω when the output voltage is 6 V. **(Ans: 5 V)**

6. In a non-inverting amplifier, the input voltage is 0.5 V and the output voltage is 2 V. If the input resistance of the amplifier is 1.2 kΩ. Calculate the feedback resistance. **(Ans: 3.6 kΩ)**
7. In a non-inverting amplifier, the input voltage is 2 V and the output voltage is 6 V. If the feedback resistance of the amplifier is 10 kΩ, calculate the input resistance. **(Ans: 5 kΩ)**
8. Calculate the output voltage of a non-inverting amplifier using an input resistance of 120 Ω and feedback resistance of 180 Ω when the input voltage is 0.5 V. **(Ans: 1.25 V)**
9. Calculate the input voltage of a non-inverting amplifier using an input resistance of 1.2 kΩ and feedback resistance of 1.8 kΩ when the output voltage is 6 V. **(Ans: 2.4 V)**
10. Calculate the gain of a non-inverting amplifier, if R_f = 1.8 kΩ and R_i = 1.2 kΩ. **(Ans: 2.5)**
11. Calculate the gain of an inverting amplifier, if R_f =18 kΩ and R_i = 12 kΩ. **(Ans: -1.5)**
12. The input signals to an adder circuit are 3 mV, 6 mV and 18 mV through resistors of 120 Ω, 150 Ω and 180 Ω respectively. Find the value of feedback resistor to get an output of 50 mV. **(Ans: 303.03 Ω)**
13. The input signals to an adder circuit are 6 mV, -3 mV and 9 mV through resistors of 1.2 kΩ, 1.5 kΩ and 1.8 kΩ respectively. Find the output voltage if the feedback resistance is 10 kΩ. **(Ans: 80 mV)**
14. Design an op-amp adder, if the output voltage $V_o = -(0.1\ V_1 + 0.4\ V_2 + 0.02\ V_3)$. Assume R_f = 22 kΩ. **(Ans: 220 kΩ, 55 kΩ, 1.1 MΩ)**
15. Determine the output voltage of op-amp subtractor when 4 V input is given to inverting terminal and 2 V input is given to non-inverting terminal. Consider all the resistors used are of same value. **(Ans: -2 V)**
16. Determine the output voltage of op-amp subtractor when 5 V input is given to inverting terminal and 8 V input is given to non-inverting terminal. Consider the resistance of used resistor is in same value. **(Ans: 3 V)**
17. Determine the output voltage of 3 input op-amp adder when 0.5 V, -2 V and 5 V are the inputs given to it. Consider the resistance of used resistor is in same value. **(Ans: 3.5 V)**
18. Determine the output voltage of 3 input op-amp adder when 1.5 V, 4 V and 2 V are the inputs given to it. Consider all the resistance of used resistor is of same value. **(Ans: 7.5 V)**

19. Calculate the output voltage for the circuit shown below.

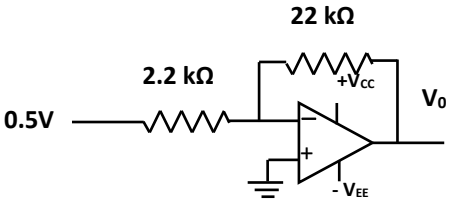

(Ans: - 5 V)

20. Calculate the output voltage for the circuit shown

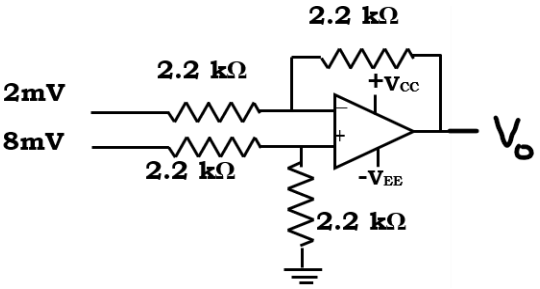

(Ans: + 6 mV)

21. Calculate the output voltage for the circuit shown

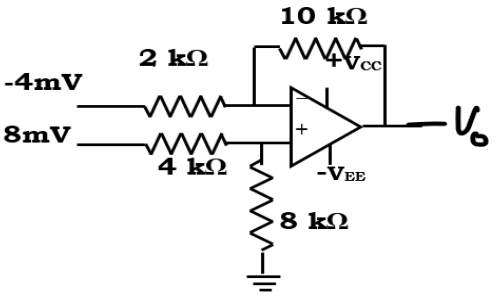

(Ans: 51.99 mV)

22. Calculate the output voltage for the circuit shown below, given V_1 = 0.3 V

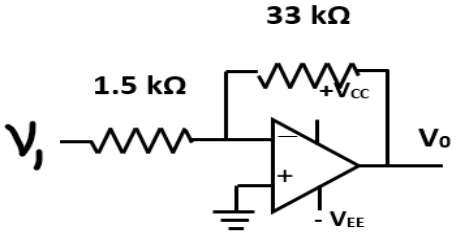

(Ans: 6.6 V)

23. Calculate the output voltage for the circuit shown below.

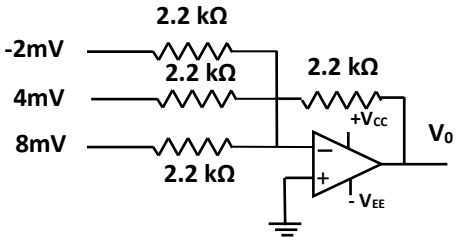

(Ans: -10mV)

24. Calculate the output voltage for the circuit shown below.

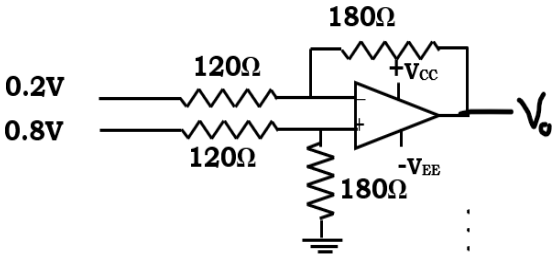

(Ans: 0.9 V)

25. Calculate the output voltage for the circuit shown below.

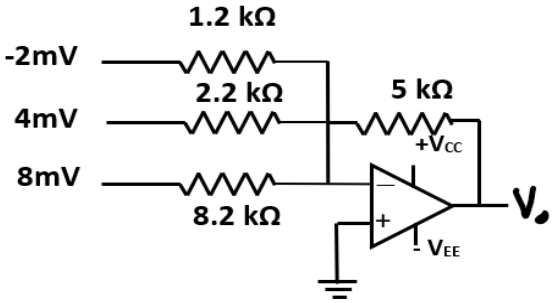

(Ans = - 5.63 mV)

26. Calculate the output voltage for the circuit shown below, given V_1 = 4 V.

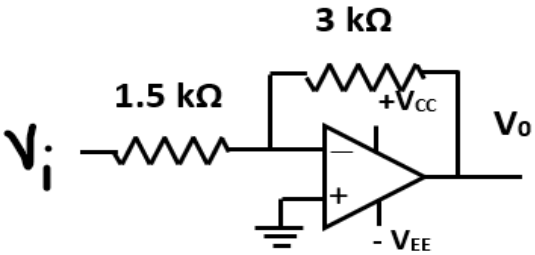

(Ans = 8 V)

27. Calculate the cut-off frequency of a first-order low-pass filter for R = 1.2 kΩ and C = 0.047 µF. **(Ans: 2.823 kHz)**
28. Calculate the resistance of resistor of a first-order low-pass filter for f = 1.5 kΩ and C = 0.022 µF. **(Ans: 4.825 kΩ)**
29. Calculate the capacitance of capacitor of a first-order low-pass filter for f = 1.59 kΩ and R = 10 kΩ. **(Ans: 10.01 nF)**
30. Calculate the cut-off frequency of a first-order high-pass filter for R = 1.2 kΩ and C = 0.01µF. **(Ans: 13.26 kHz)**
31. Calculate the resistance of resistor of a first-order high-pass filter for f = 10 kΩ and C = 0.022 µF. **(Ans: 723.79 Ω)**
32. Calculate the capacitance of capacitor of a first-order high-pass filter for f = 15.9 kΩ and R = 10 kΩ. **(Ans: 1 nF)**

*****

Chapter 6

Oscillators

Choose the correct answer:

1.	An oscillator converts (a) AC to DC power (b) DC to AC power (C) DC to DC power (d) none of these **(b) DC to AC power**
2.	A parallel combination of L and C that produces electrical oscillations of any desired frequency is known as an (a) tank circuit (b) thumb circuit (c) logic gate (d) clamper circuit **(a) tank circuit**
3.	In Wein bridge oscillator, the frequency determining elements are (a) L and C (b) R and C (c) R, L and C (d) L and R **b) R and C**
4.	In RC phase shift oscillator three RC sections are used to produce a phase-shift of (a) 30^0 (b)180^0 (c) 10^0 (d) 90^0 **(b) 180^0**
5.	The most commonly used piezoelectric crystal is (a) Quartz crystal (b) magnetic crystal (c) electric crystals (d) tourmaline crystal **(a) Quartz crystal**
6.	The oscillator suitable for generating high frequency signal is (a) LC oscillators (b) RC oscillators (c) β-oscillator (d) α-oscillator **(a) LC-oscillator**
7.	Both positive and negative feedback is employed in (a) Wein- bridge oscillator (b) RC phase-shift oscillator (c) Crystal oscillator (d) Collpitt's oscillator **(a) Wein-bridge oscillator**
8.	In a Wein bridge oscillator voltage gain of its internal amplifier is (a) 29 (b) 3 (c) 0 (d) 2 **(b) 3**
9.	In a crystal oscillator, the frequency determining element is (a) resistor (b) capacitor (c) inductor (d) crystal **(d) crystal**
10.	The major drawback of LC and RC oscillators is (a) poor frequency stability (b) good frequency stability

	(c) excellent frequency stability (d) none of these **(a) poor frequency stability**

Fill in thes blanks

1.	A circuit which generates ac signal without any externally applied input signal is called as an _____ **oscillator**
2.	An electrical oscillations whose amplitude decreases with time are known as _____ **damped oscillations**
3.	The condition $A\beta = 1$ and overall phase shift to be 0^0 or 360^0 is known as _____ **Barkhausen criterion**
4.	Hartley oscillator uses _____ feedback. **inductive feedback**
5.	Colpitts oscillator uses _____ feedback. **capacitive feedback**
6.	In a RC phase shift oscillator, each RC section provides a phase shift of _____ **60^0**
7.	Phase shift produced by bridge network in Wien bridge oscillator is _____ **0^0**
8.	The oscillator which works on the principle of piezo- electric effect is _____ **crystal oscillator**

One mark questions (knowledge)

1. What is a positive feedback?
2. What is an oscillator?
3. What is the function of an electronic oscillator?
4. What type of feedback is employed in oscillator?
5. What are sinusoidal oscillators?
6. What are non-sinusoidal oscillators?
7. What are damped oscillations?
8. What are undamped oscillations?
9. Which type of feedback is used in sinusoidal oscillator?
10. What is a tank circuit or tuned circuit?
11. What is low frequency oscillator?

12. Name any one low frequency oscillator.
13. What is high frequency oscillator?
14. Name any one high frequency oscillator.
15. Name any one type of RC oscillator.
16. Name any one type of LC oscillator.
17. Name the oscillator which produces sustained oscillations.
18. Name the oscillator circuit that produces no phase shift in the feedback network.
19. Write the expression for frequency of oscillations of a Wien bridge oscillator.
20. Write the expression for frequency of oscillations of a RC phase shift oscillator.
21. Write the expression for frequency of oscillations of a Colpitts oscillator.
22. Write the expression for frequency of oscillations of a Hartley oscillator.
23. Name any one material which exhibits piezo electric effect.

One mark questions (Understanding)

1. Which signal acts as the starting signal for oscillations?
2. Write the expression for voltage gain of a positive feedback.
3. Mention one example for relaxation oscillator.
4. Mention one example for sinusoidal oscillator.
5. What should be the value of loop gain to start oscillations?
6. What should be the value of loop gain for sustained oscillations?
7. Classify the oscillators based on the frequency.
8. What type of feedback is used in Colpitts oscillator?
9. What type of feedback is used in Hartley oscillator?
10. How many RC sections are required for a phase shift oscillator?
11. What is the phase shift in each RC section of a phase shift oscillator?
12. Name the oscillator which uses both types of feedback.
13. Why is negative feedback provided in Wien bridge oscillator?
14. Mention the phase shift produced by the bridge network in the Wien bridge oscillator?
15. Mention the principle used in a crystal oscillator.
16. When do you prefer crystal oscillator?
17. Mention any one application of crystal oscillator.

One mark questions (skill)

1. Draw the basic block diagram of an oscillator.
2. Draw the tank circuit consisting of one capacitor and one inductor.
3. Draw the circuit of Hartley oscillator.
4. Draw the circuit of Colpitts oscillator.
5. Draw the circuit of RC phase shift oscillator.
6. Draw the circuit of Wien bridge oscillator.
7. Draw the circuit symbol of a crystal.
8. Draw the electrical equivalent circuit of crystal.

Two mark questions (knowledge)

1. What is an oscillator? How is it different from an amplifier?
2. Explain briefly the conditions of Barkhausen criterion.
3. What is a Hartley oscillator? Explain.
4. Write any two applications of a Hartley oscillator.
5. What is Colpitts oscillator? Explain.
6. Write any two applications of a Colpitts oscillator.
7. What is RC phase shift oscillator? Explain.
8. Write any two applications of a RC phase shift oscillator.
9. What is Wien bridge oscillator? Explain.
10. Write any two applications of Wien bridge oscillator.
11. What is crystal oscillator? Explain.
12. Write any two applications of crystal oscillator.
13. Explain piezoelectric effect.

Two mark questions (Understanding)

1. Distinguish between sinusoidal and relaxation oscillators.
2. Distinguish between damped and undamped oscillations.
3. Why do you use three RC sections in RC phase shift oscillator?
4. Explain the tank circuit employed in Hartley oscillator.
5. Explain the tank circuit employed in Colpitts oscillator.
6. Mention any two advantages of a crystal oscillator over LC and RC oscillators.
7. Mention any two limitations of LC and RC oscillators.
8. Write any two advantages of RC oscillators over LC oscillators.

9. Why is quartz crystal commonly used in crystal oscillator?
10. Mention any two applications of a crystal oscillator.
11. Name the materials that exhibit piezoelectric effect and mention their application areas.

Two mark questions (Skill)

1. Draw the circuit diagram of a Hartley oscillator.
2. Draw the circuit diagram of a Colpitts oscillator.
3. Draw the circuit diagram of a RC phase shift oscillator.
4. Draw the circuit diagram of a Wien bridge oscillator.
5. Draw the circuit diagram of a crystal oscillator.
6. Draw the circuit symbol and equivalent circuit of crystal.

Three mark questions (knowledge)

1. Explain briefly how the oscillations are produced in a LC tank circuit.

Three mark questions (Understanding)

1. Draw the circuit diagram of a Hartley oscillator. Mention the expression for its frequency of oscillations.
2. Draw the circuit diagram of a Colpitts oscillator. Mention the expression for its frequency of oscillations.
3. Draw the circuit diagram of a RC phase shift oscillator. Write the expression for its frequency of oscillations.
4. Draw the circuit diagram of a Wien bridge oscillator. Write the expression for its frequency of oscillations.

Three mark questions (skill)

1. Draw the circuit diagram of crystal oscillator. Draw the electrical equivalent circuit of a crystal.

Five marks questions (understanding)

1. With a circuit diagram explain the working of a Hartley oscillator. Write the expression for its frequency and feedback factor.

2. Draw the circuit diagram of Colpitts oscillator and explain its action. Write the expression for its frequency and feedback factor.
3. Explain the action of an op-amp RC phase shift oscillator with a circuit diagram. Write the expression for its frequency and feedback factor.
4. Draw the circuit diagram of an op-amp Wien bridge oscillator and explain its working. Write the expression for its frequency and feedback factor.
5. Explain the working of crystal oscillator with a circuit diagram. Write the expression for its frequency of oscillation.

Problems:

1. A transistor Colpitts oscillator has L = 4 mH, C_1 = 10 nF and C_2 = 10 nF. Determine the frequency of oscillations. **(Ans: 35.6 kHz)**
2. A Colpitts oscillator circuit is to generate a frequency of 24 kHz. The capacitors used are C_1 = 0.2 µF and C_2 = 0.22 µF. Find the value of an inductor used. **(Ans: 0.42 mH)**
3. A Colpitts oscillator oscillates at 1.13 MHz. If the inductor in the feedback network has a value of 20 µH and one of the capacitors value is 0.1 µF. Calculate the value of the other capacitor. **(Ans: 0.001 µF)**
4. Calculate the frequency of oscillations and feedback ratio in a Colpitts oscillator circuit containing the tank circuit with L = 10 µH, C_1 = 0.22 µF and C_2 = 0.47µF. **(Ans: 0.13 MHz, 0.46)**
5. A Hartley oscillator has L_1 = 3 mH, L_2 = 5 mH and C = 10 nF. Determine the frequency of oscillations. **(Ans: 17.8 kHz)**
6. A Hartley oscillator circuit is to generate a frequency of 1200 kHz. If the capacitor in the feedback network has a value of 220 pF and one of the inductors value is 20 µH, calculate the value of the other inductor. **(Ans: 60.03 µH)**
7. Calculate the frequency and feedback ratio of the circuit shown below. **(Ans: 56.3 kHz, 0.176)**

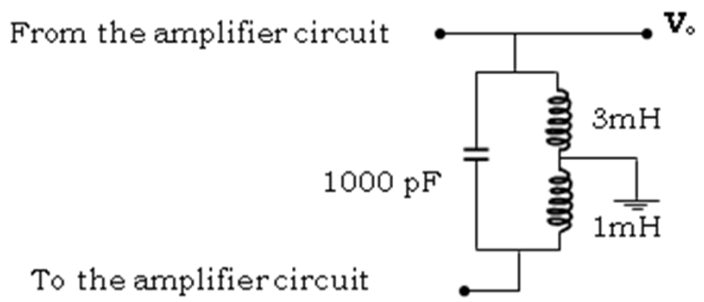

8. A RC phase shift oscillator uses three identical RC sections in the feedback network. The values of the components are R = 680 Ω and C = 220 nF. Determine the frequency of oscillation. **(Ans: 434.5 Hz)**
9. What should be the value of capacitor required for a phase shift oscillator to produce a frequency of 338 Hz, if the resistance used is 220 Ω? **(Ans: 0.874 μF)**
10. The frequency of the phase shift oscillator is 125 Hz. If the value of capacitance of the capacitor used is 0.22 μF, calculate the value of resistance used. **(Ans: 2363.9 Ω)**
11. The frequency of the Wien bridge oscillator is 1200 Hz. If the resistance value used is 820 Ω, calculate the value of capacitance to be used. **(Ans: 0.161 μF)**
12. The RC network of Wien bridge oscillator consists of resistors and capacitors of values $R_1 = R_2 = R = 270$ kΩ and $C_1 = C_2 = C = 470$ pF. Determine the frequency of oscillations. **(Ans: 1254.8 Hz)**
13. The frequency of the Wien bridge oscillator is 1500 Hz. If the capacitance value used is $C_1 = C_2 = C = 0.1$ μF, calculate the value of resistance $R_1 = R_2 = R$ to be used. **(Ans: 1061.5 Ω)**

*****

Chapter 7

Wireless Communications

Choose the correct answer:

1.	Identify the layers of Ionosphere. (a) D layer (b) E layer (c) F layer (d) All of these **(d) All of these**
2.	Ground waves are also called (a) Surface waves (b) space waves (c) Sky waves (d) Line of sight waves **(a) Surface waves**
3.	The layer of atmosphere which reflects the radio waves is (a) Troposphere (b) Stratosphere (c) Mesosphere (d) Ionosphere **(d) Ionosphere**
4.	Line of sight waves are also called (a) Space waves (b) Ground waves (c) Sky waves (d) None of these **(a) Space waves**
5.	During day time, which of the following is the nearest ionospheric layer to the earth surface (a) D layer (b) E layer (c) F_1 layer (d) F_2 layer **(a) D layer**
6.	The medium through which the information flows is known as (a) Source (b) Transmitter (c) Channel (d) Receiver **(c) Channel**
7.	The Ionosphere layers that is present during both day and night time are (a) D, E and F (b) D and E (c) only F (d) only D **(c) only F**
8.	Which layer of the Ionosphere is called Kennelly-Heaviside layer (a) D layer (b) E layer (c) F_1 layer (d) F_2 layer **(b) E layer**
9.	Which layer of the Ionosphere is called Appleton-Barnett layer (a) D layer (b) E layer (c) F layer (d) none of these **(c) F layer**

Fill in the blanks:

1.	The velocity of an EM wave is _____ **3×10^8 metres/second**

2.	The shortest distance measured between the transmitting antenna and the first receiving antenna along the earth's surface after ionospheric propagation is called _____ **Skip distance**
3.	The region on the earth where neither ground wave nor sky wave is present is termed as _____ **skip zone**
4.	The highest frequency of the radio wave above which the wave will not be returned to earth is termed as _____ **critical frequency**
5.	Fluctuation in the received signal strength at the receiver is termed as _____ **Fading**
6.	The maximum distance up to which a space wave can reach is called as _____ **radio horizon**
7.	The maximum distance visible to the naked eye on the surface of the earth is called _____ **optical horizon**

One mark questions (knowledge)

1. What is wireless communication?
2. What is noise?
3. What is troposphere?
4. What are ground waves?
5. What are sky waves?
6. What are space waves?
7. What is the function of transmitter in communication system?
8. What is the function of receiver in communication system?
9. What is optical horizon?
10. What is radio horizon?
11. What is ionosphere?
12. Define skip distance.
13. Define skip zone.
14. Define critical angle.
15. Define critical frequency.
16. Define single hop distance.
17. What is multiple hop transmission?
18. What is fading?

One mark questions (understanding)

1. Define signal to noise ratio.
2. Define noise factor.
3. Mention the frequency of radio waves.
4. Name the mode of propagation of radio waves which travel in a straight line from the transmitting antenna to the receiving antenna.
5. Which layers of ionosphere disappear during night?

Two mark questions (knowledge)

1. Name the different layers of ionosphere.
2. Define signal to noise ratio SNR and noise figure NF.

Two mark questions (understanding)

1. Mention the four types of radio wave propagation.
2. Which layers of ionosphere disappear during night? What is signal fading?
3. Distinguish between skip distance and skip zone.
4. Distinguish between sky waves and ground waves.
5. Distinguish between sky wave and space wave propagation.
6. Distinguish between single hop and multi hop transmissions.

Two mark questions (skill)

1. Draw the block diagram of a basic electronic communication system.

Three marks questions (knowledge)

1. Name the different modes of propagation of electromagnetic waves.

Three marks questions (understanding)

1. Describe briefly the layers of the ionosphere and their effect on sky wave propagation.
2. Explain the importance of ionosphere in the radio communication.

Three marks questions (skill)

1. Draw a schematic diagram showing the (a) Ground wave (b) Sky wave (c) Space wave propagation modes for electromagnetic waves.

*****

Chapter 8

Modulation and Demodulation

Choose the correct answer:

1.	How many side bands are present in AM? (a) 1 (b) 2 (c) 3 (d) ∞ **(b) 2**
2.	The maximum transmission efficiency in AM wave is (a) 25% (b) 33.33% (c) 66.66% (d) 100% **(b) 33.33 %**
3.	The intermediate frequency in super heterodyne AM radio receiver is (a) 455 Hz (b) 455 kHz (c) 455 MHz (d) 455 GHz **(b) 455 kHz**
4.	If the amplitude of the modulating signal is half of the carrier signal, then the modulation index m_a is (a) 0 (b) 0.5 (c) 1 (d) 1.5 **(b) 0.5**
5.	AM wave is distorted when (a) $m_a = 0$ (b) $m_a = 0.5$ (c) $m_a = 1.0$ (d) $m_a = 1.5$ **(d) $m_a = 1.5$**
6.	The abbreviation of AGC in radio receiver stands for (a) Audio Gain Control (b) Abrupt Gain Control (c) Alternate Gain Control (d) Automatic Gain Control **(d) Automatic Gain Control**
7.	The permissible modulation index value to obtain maximum power in an AM transmitter is (a) $m_a > 1$ (b) $m_a < 1$ (c) $m_a = 1$ (d) $m_a = 0$ **(c) $m_a = 1$**
8.	The signal obtained after modulation is called (a) modulated signal (b) modulating signal (c) carrier signal (d) none of these **(a) modulated signal**
9.	Amplitude modulated signal contains (a) 5 frequency components (b) 2 frequency components (c) 3 frequency components (d) none of these **(c) 3 frequency components**
10.	In amplitude modulation, if the modulation index is more than 100% then the output signal is (a) undistorted (b) distorted (c) contains no noise (d) none of these **(b) distorted**

11.	In AM wave, useful power is carried by (a) sidebands (b) carrier signal (c) guard bands (d) none of these **(a) side bands**
12.	Modulation is done in (a) radio transmitter (b) radio receiver (c) loud speaker (d) none of these **(a) radio transmitter**
13.	In a receiver, the ratio of the signal power to the noise power at its output is termed as (a) signal-to-noise ratio (SNR) (b) resistivity (c) viscosity (d) none of these **(a) signal-to-noise ratio (SNR)**
14.	In frequency modulation, the ratio of the frequency deviation to the frequency of the modulating signal is termed as (a) modulation index (b) resolution index (c) matching index (d) none of these **(a) modulation index**
15.	The device used for detection (demodulation) is called (a) detector or demodulator (b) inverter (c) chopper (d) none of these **(a) detector or demodulator**
16.	The ability of a receiver to pick up weak signals, and amplify it is termed as (a) sensitivity (b) resistivity (c) selectivity (d) none of these **(a) sensitivity**
17.	The minimum length of an antenna for effective communication of RF signals should be (a) $\frac{1}{4}$ of wavelength (b) $\frac{1}{2}$ of wavelength (c) $\frac{3}{4}$ of wavelength (d) $\frac{1}{8}$ of wavelength **(a) $\frac{1}{4}$ of wavelength**

Fill in the blanks:

1.	The process of changing some characteristics of carrier signal in accordance with instantaneous value of the modulating signal is called _____ **modulation**
2.	In AM, the ratio of amplitude of modulating signal to the amplitude of carrier wave is called_____ **modulation index**
3.	In amplitude modulation, bandwidth is_____ the modulating signal frequency. **twice**

4.	Diode detector is also called as _____ **demodulator**
5.	In frequency modulation _____ of the carrier wave remains same. **amplitude**
6.	Demodulation is done in _____ **radio receiver**
7.	Modulation in which only the amplitude of carrier wave is varied in accordance with the instantaneous value of modulating wave is called as _____ modulation. **amplitude**
8.	Modulation in which only the frequency of carrier wave is varied in accordance with the instantaneous value of modulating wave is called as _____modulation. **frequency**
9.	_____ is a measure of ability of a radio receiver to deliver a constant output for a given period of time. **Stability**
10.	In AM, when modulation is more than 100%, it is called as _____ **over modulation**
11.	The ability of a receiver to select a desired station signal and reject all unwanted station signals is termed as _____ **selectivity**
12.	In SHD radio receiver, all the incoming frequencies are converted into _____ frequency. **intermediate**

One Mark questions (knowledge)

1. What is modulating signal?
2. What is a carrier signal?
3. What is modulation?
4. Define amplitude modulation.
5. Define modulation index of an AM wave.
6. Define percent of modulation for an AM wave.
7. What is over modulation in AM?
8. Write the expression for total power of an AM wave.
9. Write the current relation for AM wave.
10. Define transmission efficiency of an AM wave.

11. Write the expression of transmission efficiency for AM signal in terms of modulation index.
12. Write an expression for the total modulation index of an AM wave when a carrier wave is modulated by several sine waves.
13. Define frequency Modulation.
14. Write an expression for instantaneous voltage of frequency modulated wave.
15. Define Modulation index of FM.
16. Write the expression for the modulation index of FM.
17. Define percent of modulation for FM wave.
18. Define frequency deviation in FM.
19. Define deviation ratio in FM.
20. Define Carrier Swing in FM.
21. What is the maximum permitted frequency deviation in FM broadcast band?
22. Define demodulation.
23. What is an envelope detector?
24. Define selectivity.
25. Define fidelity.
26. What is intermediate frequency?
27. What is the function of a mixer in a radio receiver?
28. What is the function of a local oscillator in a radio receiver?
29. Name the most common device used for AM detection.
30. Expand AGC.
31. What is the main purpose of AGC?

One Mark questions (understanding)

1. How is the length of antenna related to frequency of the signal?
2. Write an expression for the instantaneous voltage of an AM wave.
3. Write an expression for modulation index of AM in terms of V_m and V_C.
4. How many sidebands are present in an AM wave?
5. Which components of the AM wave carry information?
6. Write an expression for amplitude of sidebands present in AM wave.
7. Write an expression for the bandwidth of an AM wave.
8. Write an expression for modulation index of an AM wave in terms V_{max} and V_{min}.
9. What happens when the modulation factor in an AM exceeds unity?
10. Why is the transmission of sidebands important in AM?

11. Name the circuit which separates the modulating signal and the carrier signal in a radio receiver.

One mark questions (skill)

1. Sketch the AM wave for $m_a < 1$.
2. Sketch the AM wave for $m_a > 1$.
3. Sketch the AM wave for $m_a = 1$.

Two Mark questions (knowledge)

1. Mention the different types of modulation?
2. What is amplitude modulation? What is the value of m_a?
3. What is the range of modulation index in AM? Write the frequency expression for sidebands.
4. Define Modulation index of an AM wave. What is its significance?
5. Define transmission efficiency of AM and write its relation with m_a.
6. Define frequency modulation. Write an expression for instantaneous voltage of FM wave.
7. What is carrier swing? Write an expression for carrier swing of FM.
8. What are the basic functions of radio receiver?
9. What are the characteristics of a good radio receiver?
10. Define the terms sensitivity and selectivity with respect to a radio receiver.
11. Define the terms stability and fidelity with respect to a radio receiver.
12. What are the advantages of super heterodyne receiver?
13. What is the need of IF amplifier in receivers?
14. What are the advantages of FM over AM?

Two Mark questions (understanding)

1. Why modulation is necessary?
2. What is over modulation and why is it not preferred in AM?
3. How many side bands are present in AM wave? Mention their amplitude.
4. Name the frequency components present in an AM wave? Which component carries information?
5. Explain briefly the principle of super heterodyne receiver.
6. Why is demodulation required?

7. What do you mean by AGC? Why is it necessary for a receiver?
8. Mention any two limitations of AM.

Two Mark questions (skill)

1. Draw the frequency spectrum of an AM wave.
2. Represent the principle of amplitude modulation using diagrams.

Three Mark questions (knowledge)

1. What is modulation? Briefly explain the need for modulation.

Three Mark questions (understanding)

1. Explain the frequency spectrum of an AM wave.
2. Define the following characteristics of a radio receiver.
   a. Sensitivity
   b. Selectivity
   c. Fidelity
3. Derive an expression for modulation index of an AM wave in terms of V_{max} and V_{min}.
4. Derive an expression for the total power of AM wave.
5. Briefly explain the function of an AM diode detector.
6. Distinguish between AM and FM.

Three Mark questions (skill)

1. Sketch the waveforms of AM wave for $m_a = 0.5$, $m_a = 1$ and $m_a = 1.5$
2. Draw the block diagram of AM transmitter.
3. Draw the circuit of an AM diode detector.
4. Draw the block diagram of SHD AM radio receiver.

Five Mark questions (knowledge)

1. With a block diagram explain the various stages of AM transmitter.

Five Mark questions (understanding)

1. Derive the voltage expression of an AM wave with relevant waveforms.

2. Give a comparison between AM and FM.

Five Mark questions (skill)

1. Draw the block diagram of AM transmitter and explain the various stages.
2. Draw the schematic diagram of a diode AM detector and describe its operation.
3. Draw the block diagram of super heterodyne AM radio receiver and explain the function of each block in brief.

Problems:

1. Calculate the modulation index of AM wave if sinusoidal wave of peak value 4 V is used to modulate the carrier of peak value of 5 V. **(Ans: 0.8)**
2. In AM the maximum and minimum amplitudes of a sinusoidal modulated wave are 4 V and 1 V. Determine the percentage modulation. **(Ans: 60 %)**
3. The amplitude of signal and carrier of an amplitude modulated wave are 4 V and 6 V respectively. Calculate V_{min} of the amplitude modulated wave. **(Ans: 2.04 V)**
4. A sinusoidal carrier signal of peak amplitude 5 V and frequency 100 kHz is amplitude modulated by a 5 kHz signal of peak amplitude 3 V. What is the modulation index? Draw the spectrum of the modulated signal. **(Ans: 0.6, 105 kHz, 95 kHz)**
5. A modulating signal $10\sin(2\pi X10^3 t)$ is used to modulate a carrier signal $20\sin(2\pi X10^4 t)$. Find the (a) modulation index (b) percentage modulation (c) frequencies of the sideband components (d) bandwidth of the amplitude modulated signal. **(Ans: 0.5, 50 %, 9 kHz, 11kHz, 2 kHz)**
6. A transmitter radiates 8 kW of power with carrier unmodulated and 10.125 kW when amplitude modulated. Calculate the percent of modulation. **(Ans: 72.88 %)**
7. A radio transmitter is radiating a total power of 135 W when the modulation index is 0.7. What is the carrier power being radiated by the AM transmitter? **(Ans: 108.43 W)**
8. An AM signal has a 15 W carrier and 1.5 W in each sideband. What is the percentage of modulation? **(Ans: 63.24%)**
9. Determine the power content of the carrier and each of the sidebands for an AM signal having a percent modulation of 80% and a total power of 2200 W. **(Ans: 1666 W, 267 W,267 W)**
10. Determine the percent modulation of an AM wave whose total power content is 2500 W and whose sidebands each contain 300 W. **(Ans: 79.5 %)**

11. The antenna current of AM transmitter is initially 15 A, but rises to 18 A when modulated. Calculate the depth of modulation. **(Ans: 0.938)**
12. An antenna has an impedance of 50 Ω. A un modulated AM signal produces a current of 4.8 A. The percentage of modulation is 90. Calculate (a) the carrier power (b) the total power and (c) sideband power. **(Ans: 1152 W, 1613 W, 461 W)**
13. The antenna current of an AM transmitter is 8 A when only the carrier signal is transmitted. It increases to 8.93 A when the carrier signal is modulated by a sinusoidal signal. Find the modulation index and percentage of modulation. Determine the antenna current when modulation index is changed to 0.8.
(Ans: 0.7, 70 %, 9.2 A)
14. What is the power developed in an amplitude modulated wave in a load of 100 Ω, when the peak voltage of the carrier is 100 V and the modulation index is 0.5?
(Ans: 18.75 W)

*****

Chapter 9

Power Electronics and its applications

Choose the correct answer:

1.	SCR has (a) Two Junctions and three layers (b) Three junctions and three layers (c) Three junctions and four layers (d) Four junctions and three layers **(c) Three junctions and four layers**
2.	A thyristor is a (a) controlled power device (b) uncontrolled power device (c) passive device (d) none of these **(a) controlled power device**
3.	Identify the bidirectional semiconductor controlled device (a) Power diode (b) Power transistor (c) SCR (d) TRIAC **(d) TRIAC**
4.	Drift layer of a power diode is also called (a) Metallization layer (b) Anode terminal (c) Epitaxial layer (d) substrate layer **(c) Epitaxial layer**
5.	Impurity atom density of power diode in drift region (i.e. epitaxial layer) is (a) $10^{18} / cm^3$ (b) $10^{19} / cm^3$ (c) $10^{17} / cm^3$ (d) $10^{14} / cm^3$ **(d) $10^{14} / cm^3$**
6.	The common name of SCR is (a) TRIAC (b) BJT (c) Thyristor (d) MOSFET **(c) Thyristor**
7.	A power MOSFET is a (a) voltage controlled device (b) current controlled device (c) uncontrolled device (d)None of these **(a) voltage controlled device**
8.	The branch of electronics which deals with the control and conversion of large amounts of electrical power with high efficiency is called (a) Power electronics (b) digital electronics (c) current electronics (d) none of these **(a) Power electronics**
9.	SCR is triggered by (a) current pulse (b) voltage pulse (c) untriggered device (d) none of these **(a) current pulse**
10.	The terminals of an SCR are (a) emitter, base and collector (b) drain, source and gate

	(c) anode, cathode and gate (d) none of these **(c) anode, cathode and gate**
11.	A power MOSFET, in its output characteristics has (a) cut-off region (b) active region (c) ohmic region (d) all of these **(d) all of these**
12.	A TRIAC is a (a) unidirectional switch (b) bidirectional switch (c) optical switch (d) mechanical switch **(b) bidirectional switch**

Fill in the blanks:

1.	A two terminal PN Junction diode which has $\boldsymbol{P^+}$, $\boldsymbol{n^-}$ $\boldsymbol{and}$ $\boldsymbol{n^+}$layers is called a _____ **power diode**
2.	In a power diode n^- layer is also called as _____ **drift layer or epitaxial layer**
3.	The two heavily doped layers in power diode are $P^+ layer\ and$ _____ **N^+ layer**
4.	An SCR behaves as _____ switch. **unidirectional**
5.	The control terminal in an SCR is _____ **gate**
6.	A TRIAC can be operated in _____ modes. **four (4)**
7.	A power electronic circuit which converts a fixed AC voltage into a variable AC voltage without any change in frequency is called as _____ **AC voltage controllers**

One mark questions (knowledge)

1. What is power electronics?
2. What is a power diode?
3. Name any one power semiconducting devices.
4. Draw the circuit symbol of a power diode.
5. Name the lightly doped layer in power diode.
6. What is the magnitude of impurity atom densities in drift layer?
7. What is the magnitude of impurity atom densities in heavily doped regions?
8. What is the significance of drift region in power diode?
9. What is meant by ‘double injection’ in a power diode?

10. Name the three terminals of SCR.
11. What is the other name for SCR?
12. What is holding current in SCR?
13. What is latching current in SCR?
14. Expand SCR.
15. Expand MOSFET.
16. Expand TRIAC.
17. Name the terminals of MOSFET.
18. Name the terminals of TRIAC.
19. What is meant by uncontrolled rectifier?
20. What is meant by phase controlled rectifier?
21. Give an expression for average voltage of half wave rectifier.
22. Give an expression for average voltage of full wave rectifier.
23. Name the device used in phase controlled rectifier.
24. Name the converter which converts AC to unipolar DC current.

One mark questions (understanding)

1. Which layer is also called as a 'drift layer' in power diode?
2. Which are the two heavily doped layers in power diode?
3. How do you designate heavily doped n layer?
4. Write an expression for the voltage drop across forward conducting power diode.
5. In which region of the power diode the conductivity modulation takes place?
6. How many PN junctions are there in SCR?
7. How many layers are there in an SCR?
8. Which power semiconductor device is categorized as bidirectional current controlled device?
9. How can you control the output voltage of a rectifier?
10. How can you define the conduction angle for SCR?
11. How can you define the firing angle for SCR?

One mark questions (skill)

1. Draw the circuit symbol of SCR.
2. Draw the circuit symbol of TRIAC.
3. Draw the circuit symbol of n-channel enhancement type MOSFET.
4. Draw the circuit symbol of p-channel enhancement type MOSFET.

5. Draw the symbol of rectifier.
6. Draw the symbol of AC voltage controller.
7. Draw the symbol of DC chopper.
8. Draw the symbol of Inverter.

Two marks questions (knowledge)

1. What are the main areas of application of power electronics?
2. What is meant by conductivity modulation?
3. What is meant by double injection?
4. What is meant by a non-punch through in power diode?
5. What is a Silicon Controlled Rectifier? Why is it so called?
6. List the applications of SCR.
7. What is TRIAC? Give the circuit symbol of TRIAC.
8. Mention the four operating modes of TRIAC.
9. Name some applications of TRIAC.
10. What is MOSFET? Explain its principle of operation.
11. What are the different types of power MOSFET?
12. Name the different operating regions of MOSFET.
13. Name the types of power converters and draw their symbol.
14. Define firing angle and conduction angle of SCR.
15. Mention some of the applications of controlled rectifiers.

Two marks questions (understanding)

1. In what way a power diode is different from signal diode?
2. Mention the expression for the voltage drop across a forward biased p-n junction power diode.
3. What is Silicon Controlled Rectifier? Why is it so called?
4. List the applications of SCR.
5. Is it possible to turn ON the SCR with the gate open circuited? Explain.
6. Distinguish between holding current and latching current in SCR.
7. Name some applications of TRIAC.
8. Mention the four operating modes of TRIAC.
9. Distinguish between SCR and TRIAC.
10. Why the power semiconductor devices are used in power controls?

11. What is the difference between half-wave controlled rectifier and full-wave controlled rectifier?

Two marks questions (skill)

1. Draw the V-I characteristics of forward biased power diode.
2. Draw the equivalent circuit of two transistor analogy of a SCR.
3. Draw the V-I characteristics of SCR.
4. Sketch the typical V-I characteristics of SCR. Indicate all the regions of the characteristics.
5. Draw the V-I characteristics of TRIAC.
6. Sketch the output characteristics of MOSFET.
7. Draw the circuit diagram of MOSFET to plot its output characteristics.
8. Draw the circuit diagram of SCR half wave rectifier with RC triggering.
9. Draw the circuit diagram of SCR full wave rectifier with RC triggering.

Three marks questions (knowledge)

1. Draw the schematic cross sectional view of a typical pn junction power diode. Indicate typical dimensions and doping levels.
2. What is meant by punch through in power diode? Draw the diagram giving electric field profile of this diode.
3. What is meant by non-punch through in power diode? Draw the diagram giving electric field profile of this diode.
4. Explain the construction of SCR. Draw its circuit symbol.
5. What is meant by triggering of SCR? How is it done?
6. List the modes of operation of TRIAC and mention the preferred modes.
7. What is an AC to DC converter? Mention any two types of AC to DC converters.
8. What are the advantages of controlled rectifiers?

Three marks questions (understanding)

1. With a diagram explain P+n– junction under thermal equilibrium.
2. Distinguish between punch through and non-punch through mechanism in power diode?
3. Explain the construction of SCR. Draw its circuit symbol.
4. With circuit diagram explain the working of SCR half wave rectifier with RC triggering.

5. With circuit diagram explain the working of SCR full wave rectifier with RC triggering.

Three marks questions (skill)

1. Sketch the static V-I characteristics of SCR for different gate currents and indicate there upon holding current, latching current and break over voltage.
2. Sketch the output V-I characteristics of power MOSFET.
3. Sketch the static V-I characteristics of TRIAC.
4. Draw the circuit diagram of SCR half wave rectifier with RC triggering. Sketch its input and output waveform.
5. Draw the circuit diagram of SCR full wave rectifier with RC triggering. Sketch its input and output waveform.

Five mark questions (knowledge)

1. What is a power diode? In what way a power diode is different from signal diode? With a diagram explain the constructional features of a power BJT.
2. What is SCR? Draw the equivalent circuit of two transistor analogy of a SCR. Define latching current and how it is different from holding current?

Five mark questions (understanding)

1. Explain with a circuit diagram working of power diode under forward bias. What is meant by conductivity modulation?
2. What is SCR? Explain its construction. Distinguish between holding current and latching current of SCR.
3. With a sketch explain the two transistor model of SCR.

Five mark questions (skill)

1. Draw the structure of a power diode showing impurity atom densities. What is the significance of material designated p^+,n^-? Draw the diagram giving electric field profile of punch through p-n junction diode.
2. With circuit diagram explain the working of SCR half wave rectifier with RC triggering. Sketch its input and output waveform.
3. With circuit diagram explain the working of SCR full wave rectifier with RC triggering. Sketch its input and output waveform

Problems:

1. A thyristor is connected in series with a load resistance 50 Ω. The supply voltage is 230 V, 50 Hz. The thyristor is triggered at an angle of 30° during every positive half cycle. Compute the (a) average value of load voltage and (b) average value of load current. **(Ans: 96.60 V, 1.93 A)**
2. A transformer with secondary voltage of 230V, 50Hz, delivers power to 10 Ω load through a half wave controlled rectifier circuit. Determine (i) average output voltage (ii) average load current. **(Ans: 77.64 V, 7.764 A)**
3. A half wave rectifier feeds a 15 Ω resistance. The supply voltage is 230 V. The firing angle is π/2. Find (a) average value of load voltage and (b) average value of load current (c) power delivered to the load. **(Ans: 51.76 V, 3.45 A, 178.57 W)**
4. A half wave rectifier circuit using a thyristor is fed by a transformer whose secondary voltage is 400 sinωt. Find the average load voltage and average load current if the thyristor is fired at 30° in each positive half cycle**.**

   (Ans: 118.8 V, 2.376 A)
5. A full controlled converter is supplied from a 230 V, 50 Hz ac supply for a firing angle of 30°, determine the average load voltage consider load as purely resistive**.**

   (Ans: 193.20 V)
6. A full wave rectifier has an input voltage of 200 V rms. The load resistance is 100 Ω and firing angle is 30°. Find average load voltage and average load current**.**

   (Ans: 167.98 V, 1.68 A)
7. A full wave controlled rectifier rectifies 230 V, 50Hz a.c. mains and give an output of 150 V to a resistive load of 10 Ω. Find the firing angle. **(Ans: 63.33°)**

*****

Chapter 10

Digital Electronics

Choose the correct answer:

1.	The logical AND term is also called as (a) Sum term (b) Product term (c) Sum of Product (d) Product of Sum **(b) Product term**
2.	Logic expression for the output of XOR gate is (a) Y = $\overline{A.B}$ (b) Y = A.B (c) Y = A + B (d) Y = $\bar{A}$ B + A $\bar{B}$ **(d) Y = $\bar{A}$ B + A $\bar{B}$**
3.	Excess-3 code of $(18)_{10}$ is (a) 00011000 (b) 00011110 (c) 10000001 (d) 01001011 **(d) 01001011**
4.	Full adder adds (a) two input bits (b) three input bits (c) four input bits (d) two input bytes **(b) three input bits**
5.	Gray code is used in shaft position (a) decoder (b) multiplexer (c) encoder (d) register **(c) encoder**
6.	Logic expression for the output of two input XNOR gate is (a) Y = AB (b) Y = A+B (c) Y = $\overline{A \oplus B}$ (d) Y = $\bar{A} + \bar{B}$ **(c)** Y = $\overline{A \oplus B}$
7.	Excess-3 code is an example for (a) Non-weighted code (b) BCD code (c) ASCII code (d) Weighted code **(a) Non-weighted code**
8.	Identify the logic symbol of XOR gate. (a) 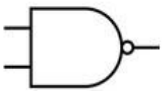 (b) 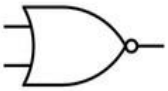 (c) 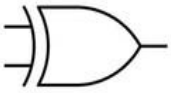 (d) 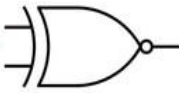 (c) 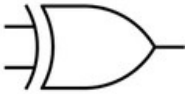
9.	Sum of product equation can be realized by (a) XOR gates (b) XNOR gates (c) NOR gates (d) NAND gates **(d) NAND gates**

10.	BCD code for $(23)_{10}$ is (a) 00010111 (b) 01010110 (c) 00100011 (d) None of these **(c) 00100011**
11.	A group of 2 adjacent cells with 1 in a K-map is called (a) Pair (b) Quad (c) Octet (d) Double **(a) Pair**
12.	Identify the non-weighted code. (a) 2421 (b) 5421 (c) 8421 (d) Gray code **(d) Gray code**
13.	The number of variables that can be eliminated by a Quad in K-map is (a) 2 (b) 4 (c) 3 (d) 1 **(a) 2**
14.	Consider a LED bulb in a room which is operated by a two way switch, the ON/OFF condition of the LED bulb resembles the function of which gate. (a) XOR gate (b) NOR gate (c) NAND gate (d) OR gate **(a) XOR gate**
15.	Logic circuits in which the output depends upon the present and previous inputs state is called as (a) combinational logic circuit (b) sequential logic circuit (c) random logic circuit (d) none of these **(b) sequential logic circuit**
16.	A sequential logic circuit which can store 1-bit data with clock input is known as (a) latch (b) switch (c) flip-flop (d) none of these **(a) flip-flop**
17.	When a NOT gate is placed inbetween S input to R input of SR flip-flop, the resulting flip-flop is a (a) J-K flip-flop (b) Master-slave flip-flop (c) D-flip-flop (d) T-flip-flop **(c) D-flip-flop**
18.	D flip-flop is also known as (a) T-flip-flop (b) master slave flip-flop (c) Delay flip-flop (d) J-K flip-flop **(c) Delay flip-flop**

Fill in the blanks:

1.	Flip-flops are used to store _____ **data**
2.	Half-adder is a _____circuit. **binary arithmetic**
3.	The disadvantage of JK flip-flop is _____ **race around condition**
4.	Gray code is used to reduce error that occurs in data_____ **transmission**
5.	Logic gates used to realize other gates are known as _____ gates. **universal**
6.	The logic circuit which adds two binary input bits is known as _____ **half-adder**
	Excess-3code is also known as _____ code. **self-complementary**
8.	A logic circuit which is used to add two bits is called _____ **half-adder**
9.	In a J-K flip-flop when J = K = CLK =1, then the output will change to their opposite state, this state is known as _____ **toggle**
10.	Mapping technique used to simplify the Boolean expression is known as _____ **K-map**
11.	A group whose all 1's are overlapped (used) by another groups is called a _____ group **redundant**
12.	In a_____ logic circuit output depends on only the present inputs, but not on the previous state of the circuit. **combinational**

One mark questions (Knowledge)

1. What is a logic gate?
2. Mention any one basic logic gate.
3. Name any one combinational logic gate.
4. What is an XOR gate?
5. Write the output Boolean expression for the two input XOR gate.
6. Write the truth table of two inputs XOR gate.
7. Write the Boolean expression for the output of XNOR gate.

8. Define an XNOR gate.
9. Write the truth table of XNOR gate.
10. What is a NAND gate?
11. What is a NOR gate?
12. Name the two input logic gate whose output is “HIGH” only when both the inputs are HIGH, otherwise the output will stay LOW.
13. Name the two input logic gate whose output is “HIGH” only when its two inputs are different.
14. Name the two input logic gate whose output is “HIGH” only when its two inputs are identical.
15. Define universal gate.
16. Name the two universal gates.
17. What are digital codes?
18. What is meant by BCD code?
19. What is a gray code?
20. What are weighted codes?
21. What are non-weighted codes?
22. Name any one non-weighted codes?
23. What is a self-complementing code?
24. What are canonical forms of Boolean expressions?
25. What is a canonical SOP expression?
26. What is a canonical POS expression?
27. What is Karnaugh map?
28. What is meant by looping related to K-map?
29. What is meant by overlapping group in K-map?
30. What is redundant group in K-map?
31. What are don’t care conditions?
32. Define a Pair in K-map.
33. Define a Quad in K-map.
34. Define an Octet in K-map.
35. Define combinational logic circuit.
36. What is a sequential logic circuit?
37. What is a latch?
38. What is a flip flop?
39. Define a clock pulse.

40. What is the binary equivalent of the gray code 1011?
41. What is the gray code equivalent of the binary number 1011?
42. What is a half adder?
43. What is a full adder?
44. What is a half subtractor?
45. Write the Boolean expression for the sum of half adder.
46. Write the Boolean expression for the sum of full adder.
47. Write the Boolean expression for the carry of half adder.
48. Write the Boolean expression for the carry of full adder.
49. Write the Boolean expression for the difference of half subtractor.
50. Write the Boolean expression for the carry of the half subtractor.
51. Define minterm.
52. Define maxterm.
53. What is SOP expression?
54. What is POS expression?
55. What do you understand by the term “canonical form”?

One mark questions (understanding)

1. If A and B are the inputs of XOR-gate, write its output Boolean expression.
2. Why NAND and NOR gates are called universal gates?
3. How many two input NAND gates must be used to produce two input OR function?
4. How many two input NOR gates must be used to realize two input OR function?
5. Why do we use digital codes?
6. Give an example for weighted codes?
7. Give an example for a self-complimenting code.
8. Which digital code is also called as uni-distance code?
9. Why the gray code is also called as uni-distance code?
10. Expand SOP.
11. Expand POS.
12. How many cells are possible in a n variable K-map ?
13. How many variables are eliminated from a pair?
14. How many variables are eliminated by a quad?
15. How many variables are eliminated by an octet?

One mark questions (skill)

1. Draw the symbol of XOR gate.
2. Draw the symbol of XNOR gate.
3. Realize OR gate using NAND gates.
4. Realize AND gate using NOR gates.
5. Convert 1001(Gray) to binary.
6. Convert 1001_2 to gray code.
7. Convert the decimal number 29 to BCD.
8. Write the decimal number 101 in BCD.
9. Write the BCD equivalent of the decimal number 123.
10. Draw the block diagram of half adder.
11. Draw the block diagram of full adder.
12. Draw the block diagram of half subtractor.

Two mark questions (Knowledge)

1. Realise XOR gate using basic gates.
2. What is XOR gate? Write its truth table.
3. What is XNOR gate? Write its truth table.
4. Realise XNOR gate using basic gates.
5. What are universal gates? Why are they called so?
6. Realise XNOR gate using only NOR gates.
7. Realise XOR gate using only NAND gates.
8. What is an excess-3 code?
9. What do you understand by self-complementing code? Give examples.
10. Realise half adder using XOR and AND gates.
11. Realise half adder using only NAND gates.
12. Write the Boolean expression for the sum and carry of a full-adder.
13. Realise half subtractor using XOR, NOT and AND gates.
14. Realise half subtractor using NAND gates.
15. Write the Boolean expression for the difference and borrow of a half-subtractor.
16. Define Product term and Sum term.
17. What do you understand by ‘don’t care’ condition? How it is useful in K-map simplification?
18. What is a Pair? How many variables can be eliminated by a Pair in the K- map?
19. What is a Quad? How many variables can be eliminated by a quad in the K-map?

20. What is an octet? How many variables can it be eliminated by an octet in the K-map?
21. What is race around condition? How can it be overcome?
22. Draw the logic circuit of a basic NAND latch.
23. Draw the logic circuit of un-clocked SR flip flop using NAND gates.
24. Draw the logic circuit of a D flip flop using NAND gates.

Two mark questions (Understanding)

1. Distinguish between excess-3 and BCD codes.
2. What do you understand by self-complementing code? Give examples.
3. Distinguish between weighted codes and non-weighted codes.
4. Write the difference between sum of product (SOP) and product of sum (POS).
5. Briefly explain the concept of rolling in K-map.
6. Explain the necessity of eliminating redundant groups in a K-map.
7. Distinguish between combinational and sequential logic circuits.

Two mark questions (Skill)

1. Draw the pin diagram of IC 7400.
2. Draw the pin diagram of IC 7402.
3. Show how a two input OR-gate can be constructed using only NAND-gates.
4. Convert the gray code 1001 into binary using XOR gates.
5. Convert $456_{(10)}$ to BCD code.
6. Convert decimal 786 into 8421 code.
7. Write the applications of gray code.
8. Draw the block diagram of a full adder using two half adder blocks and one OR gate.
9. Draw the truth table of a full adder.
10. Convert AB + $\bar{B}$ into canonical SOP expression.
11. Write the decimal number 25 in BCD and exces-3 code.

Three mark questions (Knowledge)

1. Realise AND, OR and NOT gate using NOR gates only.
2. Realise AND, OR and NOT gate using NAND gates only.
3. What is half-adder? Draw the logic diagram and truth table of half adder.

4. What is half-subtractor? Draw the logic diagram and truth table of half subtractor.
5. What are self-complementing codes? Explain with a numerical example.
6. Mention the steps to be followed to convert SOP form of expression into canonical SOP expression.
7. What is meant by don't care condition in K-map method? Explain it in brief.
8. What is a clock? Mention its use.

Three mark questions (Understanding)

1. Compare sequential and combinational logic circuits.
2. Distinguish between latch and flip-flop.
3. Explain the race-around condition in a JK flip-flop. How can it be eliminated?
4. With a logic circuit and truth table explain the working of D-flip-flop.

Three mark questions (Skill)

1. Draw the logic circuits for the realization of basic logic operations using NAND gate only.
2. Convert the Boolean expression Y= A.B + B.C + A.C into its canonical SOP form expression.
3. Convert the logical function of three variables F(A,B,C)= A+B.C to standard SOP expression.
4. Convert $(1001)_2$ into equivalent gray code using XOR-gates.
5. Convert $(1001)_{Gray}$ into equivalent binary using XOR-gates.
6. Find the excess-3 code of $(786)_{10}$.
7. Convert the decimal number 789 into excess-3 code.
8. Write the excess-3 equivalent code of the decimal number 102.

Five mark questions (Knowledge)

1. What is NAND gate? Realise AND, OR, NOT and XNOR gate using NOR gates.
2. What is NOR gate? Realise AND, OR, NOT and XOR gates using NAND gates.
3. What is full-adder? Draw the diagram of full-adder using two half adders and an OR-gate. Write the truth table of full-adder.
4. What is full-adder? Draw the diagram of full-adder using three input X-OR gate and basic gates. Write the truth table of full-adder.

5. Write the steps involved in the simplification of Boolean equation using K-map technique.

Five mark questions (Understanding)

1. With a logic circuit and truth table explain the working of clocked SR flip-flop.
2. With a logic circuit and truth table explain the working of JK flip-flop.

Problems:

1. Simplify the Boolean expression Y = ∑m (0, 2, 4, 8, 10) + ∑d (12, 14) using K-map. Draw the NAND gate equivalent circuit to realize the simplified expression.
2. Simplify the Boolean expression Y = ∑m (4, 5, 7, 9, 11, 12, 13, 15) + ∑d (1, 3, 8) using K-map. Draw the NAND gate equivalent circuit to realize the simplified expression.
3. Simplify the Boolean expression Y = ∑m (0, 2, 6, 8, 10, 12, 14) + ∑d (4, 9, 13) using K-map. Draw the NAND gate equivalent circuit to realize the simplified expression.
4. Simplify the Boolean expression Y = ∑m (1, 3, 5, 6, 8, 9, 11, 12) + ∑d (0, 7, 14) using K-map. Draw the logic circuit using basic gates to realize the simplified expression.
5. Simplify the Boolean expression Y = ∑m (0,2,4,6,8,10,11,12,14,15) + ∑d (9,13) using K-map. Draw the logic circuit using basic gates to realize the simplified expression.
6. Simplify using K-map, Y (A, B, C, D) = ∑m (0,1,4,13,15) + ∑d (2,5,7).
7. Simplify the Boolean expression Y (A, B, C, D) = ∑m (1,2,3,5,6,7,12) using K-map. Also draw the logic circuit for the simplified expression using basic gates.

*****

Chapter 11

Microcontroller

Choose the correct answer:

1.	The number of timers present in 8051 microcontroller is (a) 1 (b) 2 (c) 3 (d) 4 **(b) 2**
2.	8051 microcontroller is a (a) 8 bit controller (b) 16 bit controller (c) 32 bit controller (d) 64 bit controller **(a) 8 bit controller**
3.	Microcontroller chip contains (a) RAM (b) ROM (c) Timer (d) All of these **(d) All of these**
4.	The number of I/O pins (lines) present in 8051 microcontroller is (a) 16 (b) 24 (c) 32 (d) 40 **(c) 32**
5.	The number of bits of data a register A of 8051 holds is (a) 64 bits (b) 32 bits (c) 16 bits (d) 8 bits **(d) 8 bits**
6.	Identify the addressing mode of the instruction MOV A, @R0 (a) Register (b) Immediate (c) Direct (d) Indirect **(d) Indirect**
7.	The addressing mode of the instruction MOV A, #43H (a) Indirect (b) Immediate (c) Register (d) Direct **(b) Immediate**
8.	The command used to move the number 27H into the accumulator is (a) MOV A, P27 H (b) MOV A, #27H (c) MOV A, @27H (d)none of these $(\boldsymbol{b})\boldsymbol{MOV\ A, \#27H}$
9.	Full form of CPU is (a) Common Perform Unit (b) Central Programming Unit (c) Central Processing Unit (c) none of these **(c) Central Processing Unit**
10.	The microcontroller which deals with 8 bit data is known as (a) 8 bit microcontroller (b) 16 bit microcontroller (c) 32 bit microcontroller (d) none of these **(a) 8 bit microcontroller**
11.	ALU performs (a) Arithmetic operations only (b) logic operations only (c) Both arithmetic and logical operations (d) none of these

	(c) Both arithmetic and logical operations
12.	The only two 8051 microcontroller instruction which uses B register are (a) ADD and SUM (b) MUL and DIV (c) PUSH and POP (d) none of these **(b) MUL and DIV**

Fill in the blanks:

1.	A small computer on a single integrated circuit consisting of CPU, memory, input/output ports is called _____ **microcontroller**
2.	8051 microcontroller has _____ bit address bus. **16**
3.	8051 microcontroller has _____ I/O pins. **32**
4.	8051 microcontroller has _____ interrupts. **5**
5.	RAM is a _____ memory. **volatile**
6.	A sequence (series) of instructions written by a programmer to perform a particular task is called as a _____ **program**
7.	The register used to store the output generated by ALU is _____ **Accumulator (register-A)**

One Mark questions (Knowledge)

1. What is microcontroller?
2. What is microprocessor?
3. Mention the size of RAM in 8051.
4. Mention the size of the on chip ROM in 8051.
5. What is the width of data bus in 8051?
6. What is Accumulator?
7. What is 'B' register?
8. What is data pointer (DTPR)?
9. What is the function of the Program Counter?
10. Name any one 16-bit register of 8051.
11. What is the function of Stack Pointer in 8051?
12. Expand PSEN in 8051 microcontrollers.

13. Expand SFR.
14. Expand PSW.
15. What is an interrupt?
16. What is an addressing mode in 8051?
17. Expand EEPROM.
18. Expand SRAM.
19. Expand RAM.
20. What is machine language?
21. Mention one example for data transfer instructions.
22. Mention one example for arithmetic instructions.
23. Mention one example for logical instructions.
24. Mention one example for branch instructions.
25. What is the use of MOV instruction?

One Mark questions (understanding)

1. Why is 8051 called as 8-bit microcontroller?
2. How many serial ports are there in 8051?
3. How many timers are present in 8051?
4. How many interrupt sources are there in 8051?
5. Which register holds the address of the next instruction to be executed?
6. How many bits of binary data can a register A hold?
7. How many bits of binary data can a register R hold temporarily?
8. How many bits of address can register PC hold?
9. How much of total external data memory can be interfaced to the 8051?
10. How many I/O ports are there in 8051?
11. How many interrupts are there in 8051?
12. Which is the only register without internal on-chip RAM address in 8051?
13. Which memory is referred as data memory?
14. Which memory is referred as code memory or program memory?
15. Which addressing mode can be used with PUSH and POP instructions?
16. Which is the addressing mode for the instruction MOV A, #50H?
17. Which is the addressing mode for the instruction MOV A, 50H?
18. Which is the addressing mode for the instruction MOV A, @R0?
19. What does the following instruction do? “MOV A, 0F0H”
20. What does the following instruction do? “MOV A, 1FH”.

21. Which symbol is used in the instruction while using register indirect addressing mode?
22. Which symbol is used in the instruction while using immediate addressing mode?
23. Why ROM is non-volatile?
24. Why RAM is volatile?

One Mark questions (skill)

1. Register R0 contains 50H and Accumulator contains 01H. What will be the content of A after executing the instruction MOV A, R0?

Two Mark questions (knowledge)

1. Mention the features of 8051 microcontrollers.
2. What is an addressing mode? Why is it necessary?
3. Write any two examples for direct addressing instructions.
4. What is register addressing mode? Mention one example.
5. What is direct addressing mode? Mention one example.
6. What is indirect addressing mode? Mention one example
7. What is immediate addressing mode? Mention one example.
8. What are the fields of an assembly language instruction?
9. What are data transfer instructions? Give one example.
10. What are arithmetic instructions? Give one example.
11. Write the instructions to load value FFH internal RAM address 50H using direct and indirect addressing modes.
12. What is the difference between MOV and MOVX instructions of 8051?
13. Define the terms op-code and operand.

Two Mark questions (understanding)

1. Mention two differences between microprocessor and microcontroller.
2. Differentiate between program memory and data memory.
3. Which general purpose registers are used for multiplication and division operations in 8051?

Two Mark questions (skill)

1. What will be the contents of A after execution of following instruction.
   MOV A, #54H

Three Mark questions (knowledge)

1. List the features of 8051 microcontroller.
2. List the applications of microcontroller.
3. What is meant by Addressing mode in 8051? Name any two addressing modes.
4. Mention the addressing modes of 8051 microcontroller.
5. Write the instructions to add numbers 10H and 20H and store the result into internal RAM address 30H.

Three Mark questions (understanding)

1. Explain immediate addressing mode with an example.
2. Explain direct addressing mode with an example.
3. Explain register addressing mode with an example.
4. Explain register indirect addressing mode with an example.
5. Classify the instruction set of 8051 with respect to their functions.

Five Mark questions (knowledge)

1. What is meant by addressing mode? How many addressing modes are there in 8051? Mention one example for each.

Five Mark questions (understanding)

1. Compare microprocessor with microcontroller.

Five Mark questions (skill)

1. Draw the general block diagram of microcontroller.
2. Draw the labelled pin diagram of 8051 IC.

Programs

1. Write a program to add two 8 bit numbers 07H and 82H and store the result at R0.
2. Write a program to multiply two 8 bit numbers 06H and 09H. Store the result Lower Byte at R0 and Higher Byte at R1.
3. Write ALP program to divide EDH by 1EH and store the quotient in R0 and remainder in R1.
4. Write the instructions to move value 34H into register A and value 3FH into register B, then add them together.
5. Write the instructions to add the values 16H and CDH, place the result in register R2.
6. Write a program to add 25H and 34H and store the result in register A.
7. Write a program to add two 8-bit numbers and store it in R6. The numbers are 01EH and 01CH.
8. Subtract 21H from 30H and write the program and solve.
9. Write instructions to subtract 10H from 30H using immediate and register addressing.
10. Write a program to divide 45H by 10H.
11. Write ALP program to multiply 35H and 45H. Store the result lower byte in R0 and higher byte in R1.

*****

Chapter 12

C-Programming

Choose the correct answer:

1.	Size of an integer data in C programming is (a) 1 byte (b) 2 byte (c) 4 byte (d) 8 byte **(a) 2 byte**
2.	Size of float data type in C programming is (a)1 byte (b) 2 bytes (c) 4 bytes (d) 8 bytes **(c) 4 bytes**
3.	If a = 16 and b = 3 then the value of the operation a/b in C programming is (a) 1 (b) 5 (c) 13 (d) 19 **(b) 5**
4.	If a = 16 and b = 3 then the value of the operation a%b in C programming is (a) 1 (b) 5 (c) 13 (d) 19 **(a) 1**
5.	The operator '&' in C programming denotes (a) Bitwise OR (b) Logical OR (c) Bitwise AND (d) Exclusive OR **(c) Bitwise AND**
6.	What is the meaning of the C operator && (double ampersand)? (a) Bitwise OR (b) Logical OR (c) Bitwise AND (d) Logical AND **(d) Logical AND**
7.	The correct C equivalent expression for A = (1/2)bh (a) A = 1*b*h/2 (b) A = 0.5*b*h (c) A = b*h/2 (d) none of these **(b) A=0.5*b*h**
8.	The number of keywords (reserved words) in C programming language is (a) 24 (b) 16 (c) 8 (d) 32 **(d) 32**
9.	Among these which is not a header file. (a) stdio.h (b) conio.h (c) math.h (d) bio.h **(d) bio.h**
10.	Basic unit or basic building blocks of a C program are called as (a) tokens (b) documents (c) files (d) none of these **(a) tokens**
11.	C operators used for performing comparison are called as (a) relational operators (b) arithmetic operators (c) logarithmic operators (d) none of these **(a) relational operators**
12.	The C equivalent expression for (2x +1) (3y +2) is

	(a) (2*x+1)*(3*y+2) (b) (2*x+1)x(3*y+2) (c) (2*x+1)(3*y+2) (d) none of these **(a) (2*x+1)*(3*y+2)**

Fill in the blanks:

1.	Total keywords or reserved words present in C language are _____ **32**
2.	C operators used for performing logical decisions are called as _____ **logical operators**
3.	The files with extension (.h) available in the C compiler and are included at the start of program for the proper function are called _____ files. **header**
4.	A simplest conditional statement which either executes or ignores a set of statements (or single statement) after a test condition is called _____ **if statement**
5.	A statement in C programming used to execute one set of statements if the condition is true and another set of statement if the condition is false is called _____ **if-else statement**
6.	In C language, the formatted output function which prints output on the screen is _____ **printf()**

One mark questions (Knowledge)

1. What is C programming language?
2. Name the person who developed C language.
3. What is case sensitivity in C language?
4. What is a function in C language?
5. What is C pre-processor?
6. What is C compiler?
7. What is debugging a C program?
8. What is character set of C language?
9. What are C tokens?
10. What are keywords in C?
11. What is an identifier in C?
12. What is a constant in C?
13. What is a character constant in C?

14. What is a string constant in C?
15. What is a variable in C?
16. Write the syntax for assigning values to variables.
17. What is a statement in C program?
18. What symbol or character is used to terminate every C statement?
19. What is an operator?
20. Write an arithmetic operator used to represent remainder obtained in integer division.
21. What is the meaning of the symbol '~'?
22. What is the use of function conio.h?
23. Which operator in C-language is also called as ternary operator?
24. What is symbolic constant in C?
25. Give a C language symbolic constant statement that will create a constant named MAX with value 100.
26. What is a newline escape sequence in C?
27. What is a bitwise operator in C?
28. What is scanf ()?
29. What is printf ()?
30. Write the general form of 'scanf ()' formatted input.
31. Write the general format of printf () formatted output.
32. What is the syntax for ternary operator in C?
33. What is an arithmetic operator in C?
34. What is an assignment operator in C?
35. What is the relational operator in C?
36. What is the logical operator in C?
37. What is the difference between single equal "=" and double equal "==" operators in C?
38. What is the use of size of operator?

One mark questions (understanding)

1. How many types of constants are there in C language?
2. Where is conditional operator used?
3. How do you represent increment operator in C?
4. How do you represent decrement operator in C?
5. How many keywords are there in C-language?

6. How many decimal places are displayed when a number has a corresponding format specifier %f?
7. Why we use main ( ) function in every C program?
8. In which header file printf ( ) and scanf ( ) functions are declared?
9. How are comments included in a C program?

Two marks questions (knowledge)

1. List the features of C language.
2. Write the commonly used pre-processor directives in C?
3. List the different C tokens.
4. What is floating point constants? Give an example.
5. What is a character constant? Give an example.
6. What is a string constant? Give an example.
7. What is the use of main ( ) function in C?
8. What is the purpose of scanf ( ) and printf ( ) function in C program?
9. Mention the decision control statements in C?
10. List the loop control statements in C?
11. What is a header file? Write the syntax for including standard libraries into C Program.
12. Mention the four types of constants in C language.
13. What are the symbols used for logical AND and logical OR operators in C?
14. What is character constant? Give an example.
15. What is string constant? Give an example.
16. What is header file? Name any one commonly used header files in C programs.
17. Write the syntax and flow chart of **if** statement in C?
18. Write the syntax and flow chart of **if-else** statement in C?
19. List the arithmetic operators in C.
20. List the logical operators in C.
21. List the assignment operators in C.
22. List the relational operators in C.
23. List the bitwise operators in C.
24. What are unary operators? How many operands are associated with a unary operator?

Two marks questions (understanding)

1. Which characters comprise the C character set?
2. Write any two arithmetic operators and its meaning.
3. What is the meaning of a% b? Find the value of 21% 4.
4. For what purpose if-statement and if-else statement are used?
5. What is the difference between local and global variable in C?
6. What is the difference between constant and variable in C?
7. What is the difference between pre increment operator and post increment operator in C?
8. What is the difference between 'x' and "x" in C?
9. Differentiate between the expression "++a" and "a++" in C-language.
10. Differentiate between the expression "- -a" and "a- -" in C-language.
11. What is the difference between unary and binary operators in C?
12. What is the difference between <stdio.h> and <conio.h> header file?

Two marks questions (skill)

1. Given x = 15 and y = 4, what values do the expression x/y and (float) x/y yield, respectively?
2. Write the C equivalent expression for (2x +1) (3y +2).
3. Draw any four symbols used while writing the flow chart.
4. Evaluate the C logical expression a&&b||c&& (!b). Given a = 2, b = 4, and c = 3.
5. If a = 2, b = 4 and c = 7 then evaluate the C logical expression a&&b||c ||(!b).
6. What is the value of 2.5*4/2?
7. Find the value of the given C expression 3-5*2.5.
8. Find the value of the given C expression 20%2*3.
9. Find the value of the given C expression 10/ (2*3).
10. Find the value of the given C expression 22%3*12/3.

Three marks questions (knowledge)

1. List the features of C language.
2. Write the format of simple C program.
3. What is data type? How many types of data types are there in C?
4. Mention the C tokens.

5. What do you mean by identifiers? Mention the rules to be followed while defining identifiers.
6. Mention the rules for constructing the variable name in C-language.
7. Write a C program to find the largest from the two given numbers using if-else statement.

Three marks questions (understanding)

1. Briefly explain the conditional operator (or ternary operator) in C.
2. What is the difference between int, char, and float data types?
3. Give memory requirement of integer type data, float type data and character type data in C?
4. Write a C program to find the area of a circle.
5. Write a C program to accept four numbers and compute their sum and average.
6. Explain if-else statement along with general syntax and flow chart.

Three marks questions (skill)

1. Convert the following mathematical expressions into C expressions:
   (i) $a + \frac{b}{c} + d$ (ii) $\frac{ab}{c-d} + d$ (iii) $b^2 - 4ac$
2. Explain the significance of the following control specifiers in C program:
   (i) %c (ii) %d (iii) %f

Five marks questions (knowledge)

1. Write the basic structure of C program and explain each section in brief.

Five marks questions (understanding)

1. What is a variable in C language? Mention the rules for constructing variable names in C.

Five marks questions (skill)

1. With the help of flow chart describe the process of creating and executing a C-program.
2. Write a C program to accept two integer numbers and print whether they are equal or not equal.

3. Write a C program to find the largest of given three integer numbers using if-else statement.
4. Write a C program to find the sum and average of four integer numbers.
5. Write a C program to accept a radius and print the area of a circle.

*****

Chapter: 13

Modern Communication Systems

Choose the correct answer:

1.	Shapes of the cells in mobile network operation system is (a) octagonal (b) circular (c) oval (d) hexagonal **(d) hexagonal**
2.	When a person with cell-phone passes through various cells, the process by which the MTSO System automatically switches call from one cell to other cell without call interruption is called (a) cell hand-off (b) call hand-off (c) cell splitting (d) call switching **(b) call hand-off**
3.	The data range of wi-fi is upto (a) 100 meters (b) 1kilometers (c) 500 meters (d) 1000 meters **(a) 100 meters**
4.	Carrier of information in optical fiber communication system is (a) copper (b) light (c) water (d) silicon **(b) light**
5.	What is the standard form of MTSO (a) Mobile Technology Switching Office (b) Mobile Telephone System Office (c) Mobile Telephone Switching Office (d) Mobile Telephone Service Office **(c) Mobile Telephone Switching Office**
6.	A typical downlink frequency in satellite communication system is (a) 4 Hz (b) 4 KHz (c) 4 MHz (d) 4 GHz **(d) 4 GHz**
7.	A typical uplink frequency in satellite communication system is (a) 6 GHz (b) 4 GHz (c) 10 GHz (d) 15 GHz **(a) 6 GHz**
8.	The signal transmitted from earth to satellite is called (a) uplink signal (b) sampling signal (c) damping signal (d) none of these **(a) uplink signal**
9.	RADAR stands for (a) RAdio Detection And Ranging (b) RAdio Demodulator And Rectifier (c) RApid Detector And Radio (d) none of these **(a) RAdio Detection And Ranging**

Fill in the blanks:

1.	The circuitry in the satellite that acts as the receiver, frequency changer, and transmitter is called a _____. **transponder**
2.	A solid, flexible, transparent, cylindrical rod made of silica and is about as thick as human hair is _____. **optical fiber**
3.	A wireless technology used to send and receive data between two devices within a small area is called _____. **bluetooth**
4.	Wi-Fi technology is defined by _____ standard. **IEEE 802.11x**
5.	A software used for surfing Internet is called _____. **browser**
6.	A set of rules that two or more computers must follow to exchange information across a network is called as a _____. **protocol**
7.	The process of subdividing an existing highly crowded cell into smaller cells is called as _____. **cell splitting**

One mark questions (Knowledge)

1. What is cellular communication system?
2. What is meant by 'cell' related to mobile communication?
3. What is a call-handoff?
4. What is frequency reuse?
5. Expand MTSO.
6. Expand GSM.
7. Expand CDMA.
8. What is cell splitting?
9. What is Internet?
10. Expand PDA.
11. Expand ISP.
12. What is a protocol?
13. Name the protocol used in Internet.
14. Define the World Wide Web (OR) what is WWW?
15. Expand URL.

16. What is a satellite?
17. What is transponder?
18. What is meant by optical fiber communication?
19. What is a communication satellite?
20. Define uplink signal.
21. Define downlink signal.
22. Define Wi-Fi.
23. What is Bluetooth?
24. What is a piconet?
25. Expand FHSS related to Bluetooth technology.
26. Expand FSK related to Bluetooth technology.
27. Expand CSMA/CA related to WI-FI technology
28. What is fiber optic cable?
29. What materials are commonly used for fiber optic cables?
30. Name the device which receives and transmits the signal from a satellite.
31. Expand RADAR.
32. What is RADAR?

One mark questions (Understanding)

1. Why adjacent cells are assigned different frequencies in mobile communication.
2. Why cells are in 'hexagon' shape during cell splitting?
3. Mention the frequency of uplink signal used in a C-band satcom system.
4. Mention the frequency of downlink signal used in a C-band satcom system.
5. Which band is preferred for the operation of Bluetooth devices?

Two marks questions (Knowledge)

1. State the different techniques used for improving capacity in cellular system.
2. Mention any two types of protocols used in computer networks.
3. What is a transponder and Mention its main function.
4. What are uplink and downlink signals in satellite communication?
5. Mention the important techniques used for Bluetooth operation.
6. What is Wi-Fi? Briefly explain its operation.

Two marks questions (Understanding)

1. Explain what is meant by cell splitting.
2. List any four additional features of 3G/ 4G cell phones.
3. Distinguish between uplink and downlink signals.
4. List the functions of a transponder.
5. If a transmitted signal takes 1 ms to go up to the target and come back after reflection, how far from the radar the target is?
6. If a transmitted signal takes 1 µs to go up to the target and come back after reflection, how far from the radar the target is?

Two marks questions (skill)

1. Draw the block diagram of a transponder.
2. Draw the block diagram of an optical fiber communication system.
3. Draw the block diagram of RADAR system.

Three marks questions (Knowledge)

1. Mention the advantages of cell phone systems.
2. Mention the advantages and uses of Wi-Fi.
3. Mention few applications of satellites.
4. Mention few applications of optical fiber communication.
5. Mention few applications of RADAR.
6. Give a broad classification of RADAR systems.
7. Mention the additional new features of the latest 3G and 4G cell phone systems compare to old 1G and 2G cell phones.

Three marks questions (Understanding)

1. With a diagram explain the function of each block of a satellite communication system
2. Mention few applications of Bluetooth.
3. Give a comparison of Bluetooth and Wi-Fi.

*****